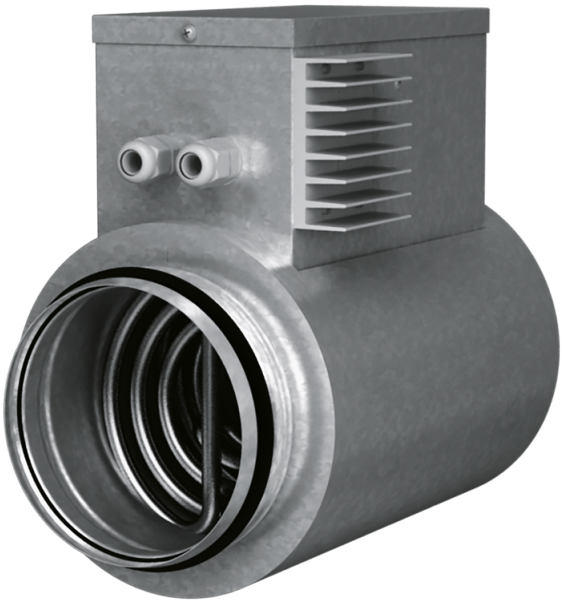

ENH 250-2.0-1 S21 V.2

Duct heater for supply air reheating

• Casing material: Galvanized steel

	Unit of measurement	ENH 250-2.0-1 S21 V.2
Connected air duct size	mm	250
Phases	-	1
Minimum supply voltage	V	230
Maximum supply voltage	V	230
Power supply frequency	Hz	50/60
Rated power	W	2000

Dimensions

ØD	B	H	L	L1
250	287	388	307	192

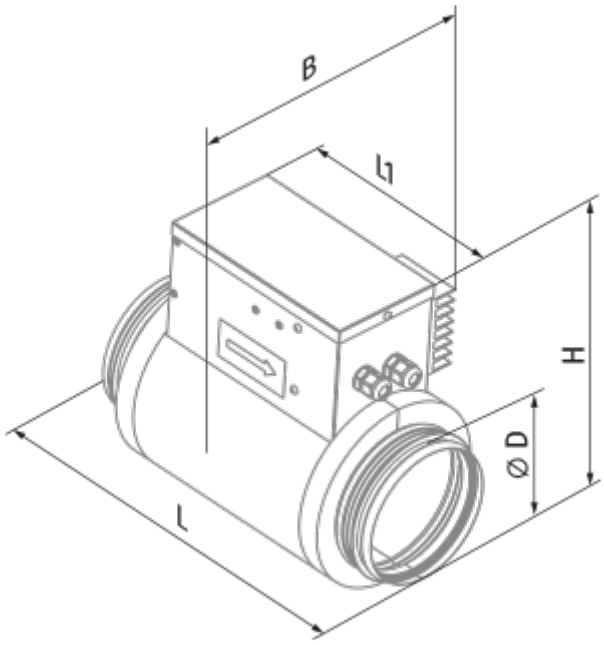
B
l1
H
ØD
L