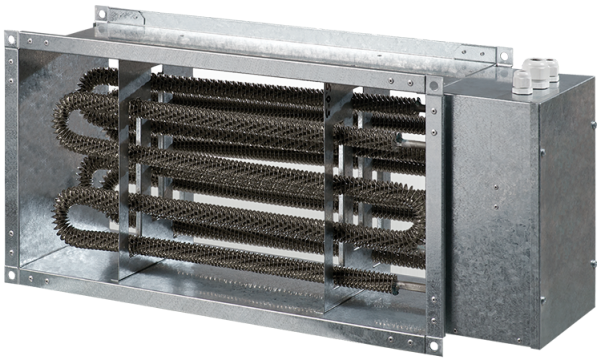

EKH 60x30-12

Duct electrical heaters for rectangular ducts

- Casing material: Galvanized steel

	Unit of measurement	EKH 60x30-12
Phases	-	3
Minimum supply voltage	V	400
Maximum supply voltage	V	400
Power supply frequency	Hz	50
Rated power	W	12000
Weight	kg	9.4

Dimensions

B	B1	B2	H	H1	H2	L
600	620	740	300	320	340	200

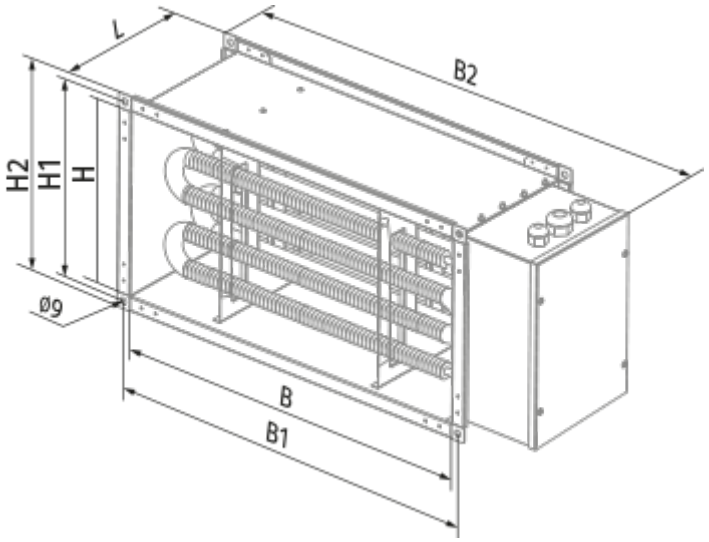
L
B2
H2
H1
H
Ø9
B
B1