EKH 40x20-7.5

Duct electrical heaters for rectangular ducts

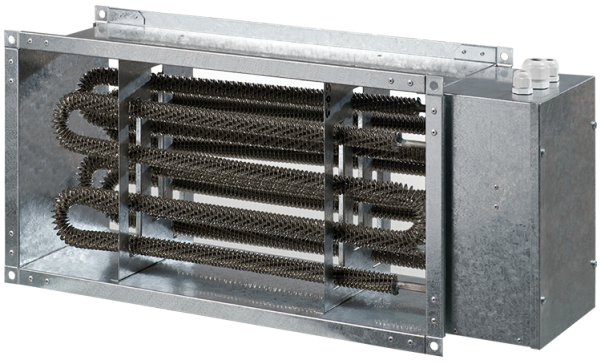

- Casing material: Galvanized steel

	Unit of measurement	EKH 40x20-7.5
Phases	-	3
Minimum supply voltage	V	400
Maximum supply voltage	V	400
Power supply frequency	Hz	50
Rated power	W	7500
Weight	kg	6.5

Dimensions

B	B1	B2	H	H1	H2	L
400	420	540	200	220	240	200

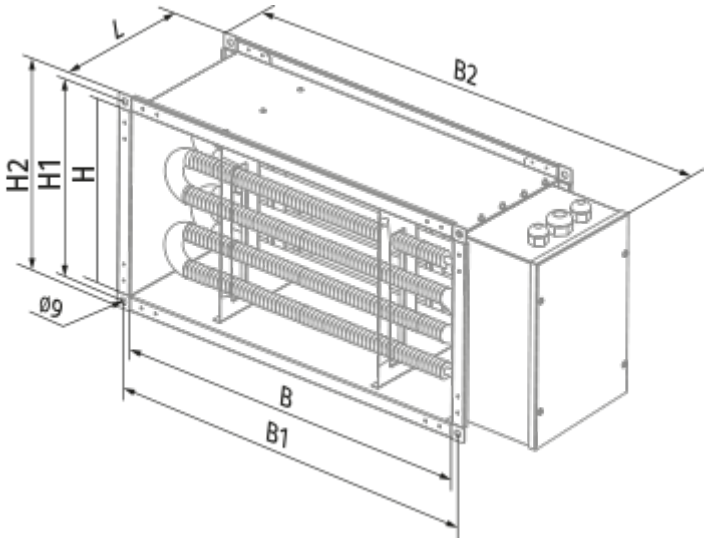
L
B2
H2
H1
H
Ø9
B
B1