

DWP2 125

Swirl diffusers

- Casing material: Steel

	Unit of measurement	DWP2 125
Weight	kg	0.267

Dimensions

d	H
125	150

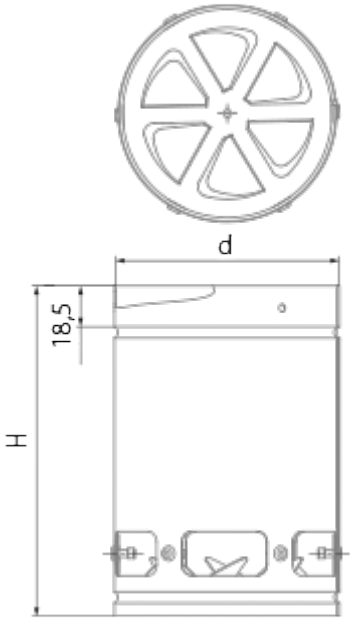
d
18,5
H