

DWP2 100

Swirl diffusers

- Casing material: Steel

	Unit of measurement	DWP2 100
Weight	kg	0.209

Dimensions

d	H
100	150

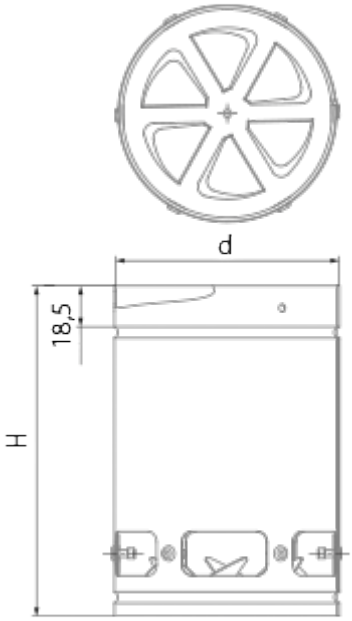
d
18,5
H