

DPP3 100

Plastic diffusers for supply ventilation, air conditioning and heating

- Casing material: Plastic

	Unit of measurement	DPP3 100

Dimensions

D	D1	L	L1
173	97	60	17.6

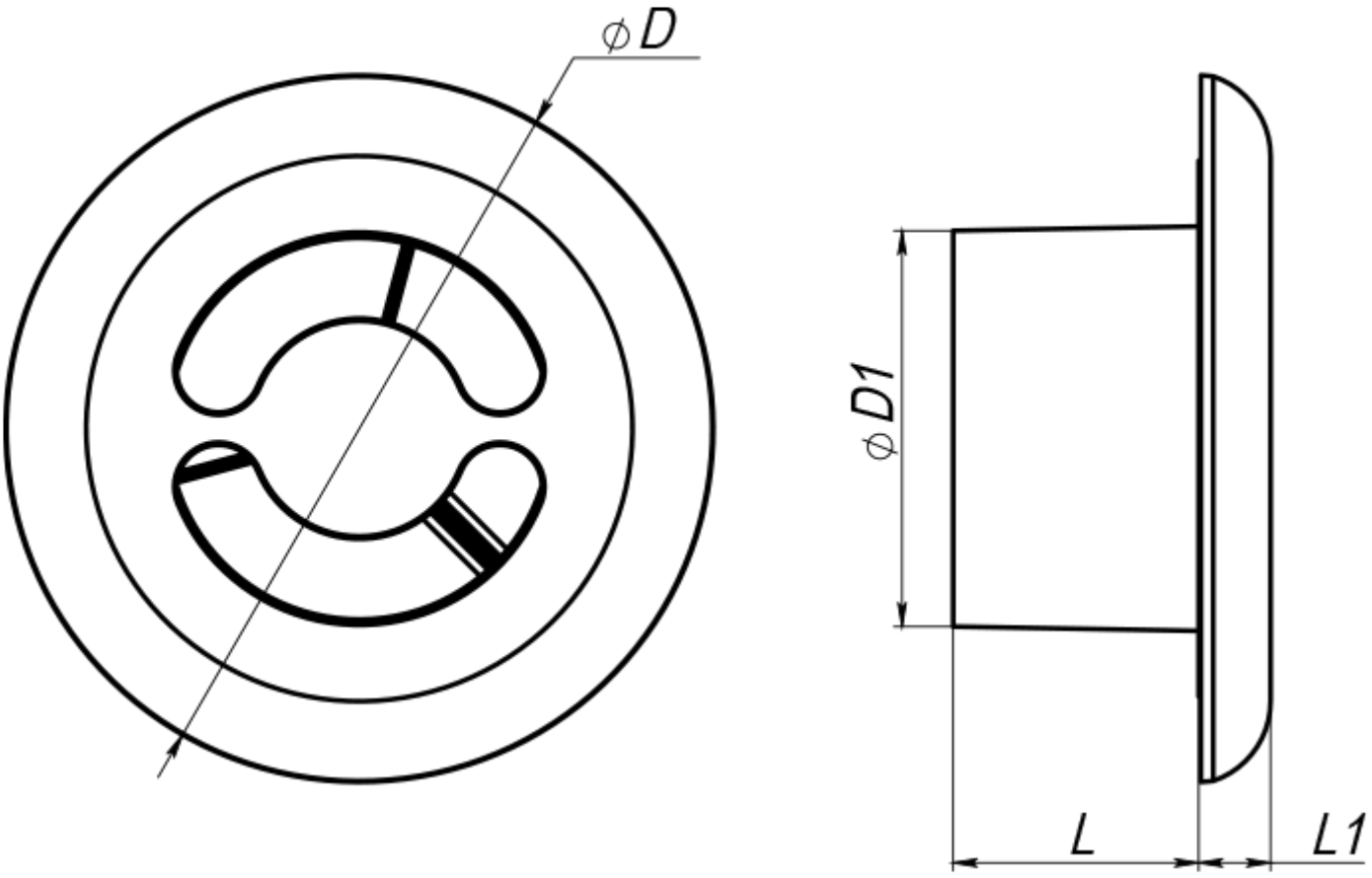
ϕD
ϕD1
L
L1