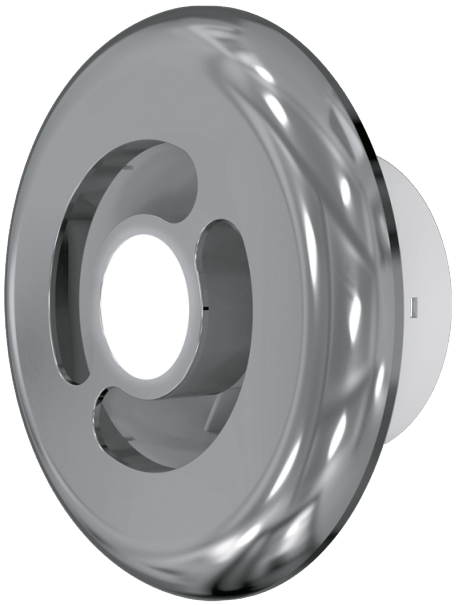

DPL3 100 LED5W-6K T Chrome

Plastic diffusers for supply and exhaust ventilation and air conditioning systems

• Casing material: Plastic

	Unit of measurement	DPL3 100 LED5W-6K T Chrome
Minimum supply voltage	V	220
Maximum supply voltage	V	240
Power supply frequency	Hz	50
Rated power	W	5
Ingress protection rating	-	IPX4

Dimensions

D	D1	L	L1
173	97	60	17.6

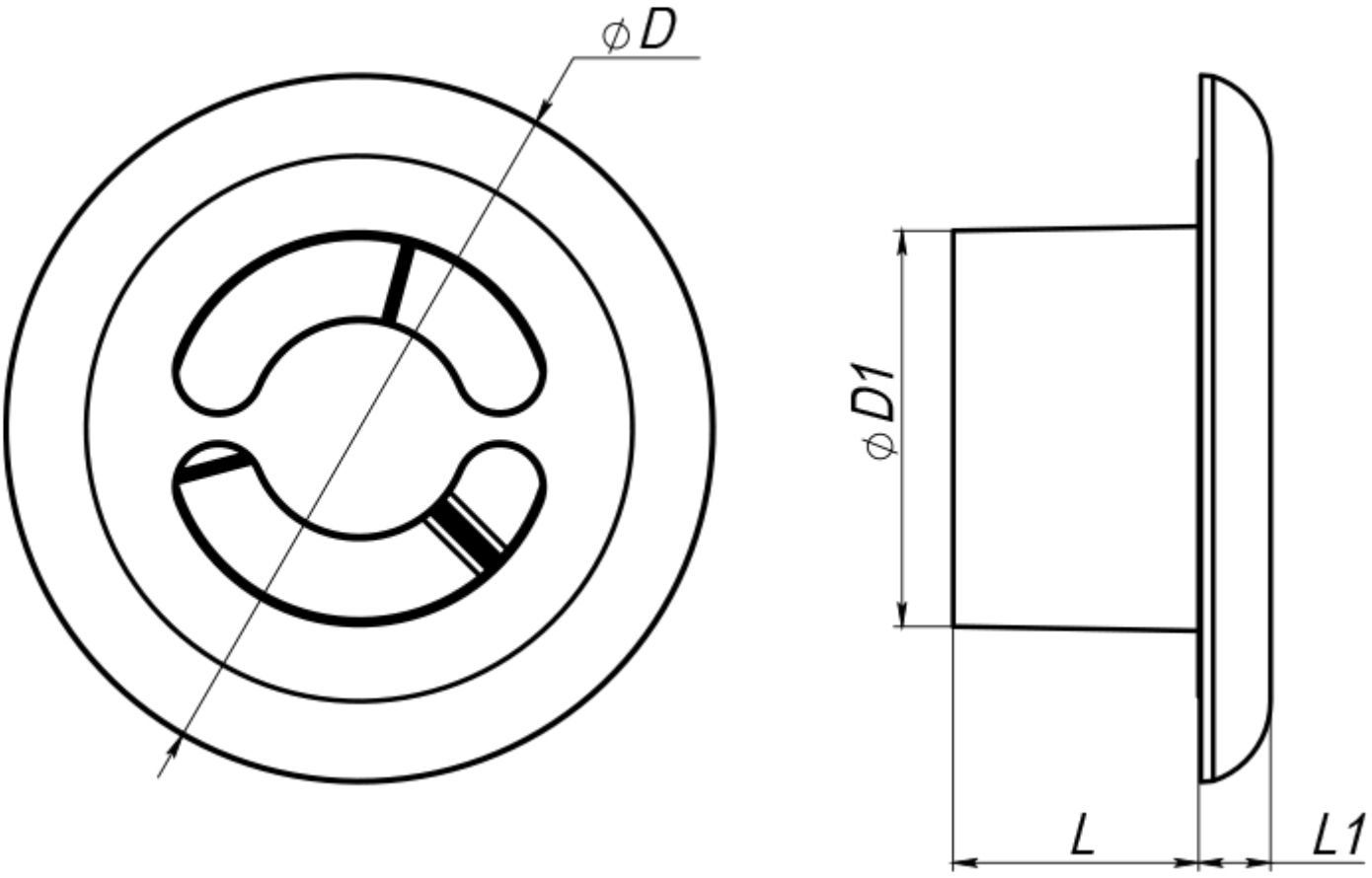
ϕD
ϕD1
L
L1