

# Deco 150 T

Extract fans

- Sound pressure level LpA at 3 m: 40
- Casing material: Plastic
- Backdraft protection: Backdraft damper
- Timer: Turn off timer

| | Unit of measurement | Deco 150 T |
|---|---|---|
| Connected air duct size | mm | 150 |
| Maximum supply voltage | V | 240 |
| Minimum supply voltage | V | 220 |
| Power supply frequency | Hz | 50 |
| Rated power | W | 24 |
| Unit current | A | 0.13 |
| Maximum airflow | m³/h | 298 |
| Sound pressure level LpA at 3 m | dB(A) | 40 |
| Ambient air temperature min | °C | 1 |
| Ambient air temperature max | °C | 40 |
| Ingress protection rating | - | IP34 |
| Impeller material | - | Plastic |

## Dimensions

| Ø D | Ø D1 | Ø D2 | H | e |
|---|---|---|---|---|
| 149.5 | 154 | 188.5 | 145 | 14 |

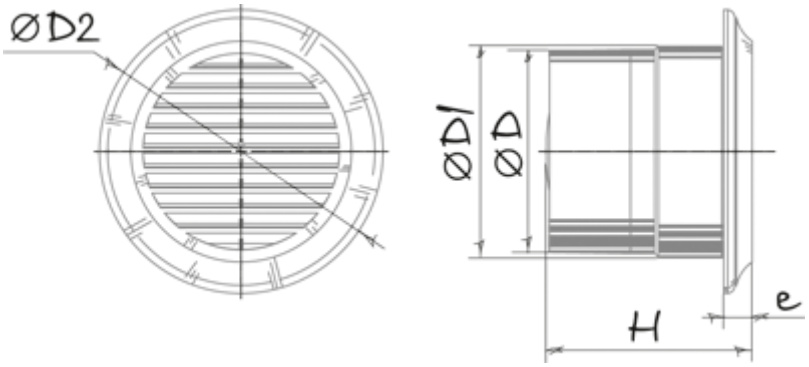
ØD2
ØD1
ØD
H
e

## Ecodesign

| | | | | | | |
|---|---|---|---|---|---|---|
| Trademark | Blauberg | | | | | |
| Model | Deco 150 T | | | | | |
| Specific energy consumption (SEC) (kWh/(m²/a)) | Cold | | Average | | Warm | |
| | -35.2 | A | -17.2 | E | -7 | F |
| Type of ventilation unit | Unidirectional | | | | | |
| Type of drive installed | Multi-speed | | | | | |
| Type of heat recovery system | None | | | | | |
| Maximum flow rate (m³/h) | 298 | | | | | |
| Electric power input (W) | 24 | | | | | |
| Reference flow rate (m³/s) | 0.058 | | | | | |
| Specific power input (SPI) (W/(m³/h)) | 0.052 | | | | | |
| Control typology | Clock control | | | | | |
| Maximum external leakage rates (%) | 2.7 | | | | | |
| Declared typology | RVU UVU | | | | | |
| Sound power level (dB(A)) | 60 | | | | | |
| The annual electricity consumption (AEC) (kWh/a) | Cold | | Average | | Warm | |
| | 60 | | 60 | | 60 | |
| The annual heating saved (AHS) (kWh/a) | Cold | | Average | | Warm | |
| | 3667 | | 1874 | | 848 | |