

Deco 100

Extract fans

- Sound pressure level LpA at 3 m: 37
- Casing material: Plastic
- Backdraft protection: Backdraft damper

	Unit of measurement	Deco 100
Connected air duct size	mm	100
Maximum supply voltage	V	240
Minimum supply voltage	V	220
Power supply frequency	Hz	50
Rated power	W	14
Unit current	A	0.085
Maximum airflow	m^3/h	105
Sound pressure level LpA at 3 m	dB(A)	37
Ambient air temperature min	°C	1
Ambient air temperature max	°C	40
Ingress protection rating	-	IP34
Impeller material	-	Plastic

Dimensions

Ø D	Ø D1	Ø D2	H	e
99	100.4	140	128.5	14

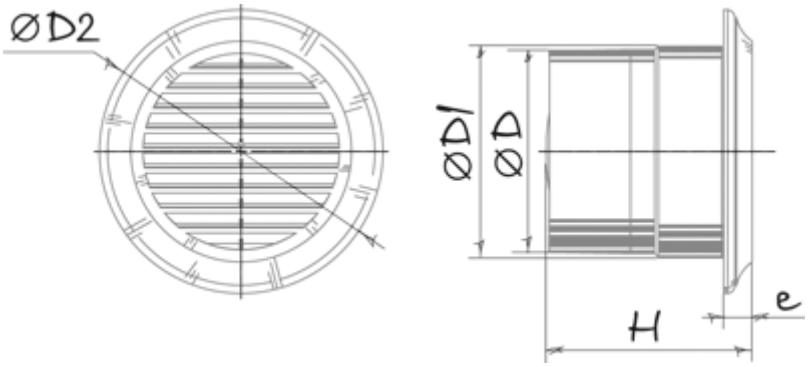
ØD2
ØD1
ØD
H
e

Ecodesign

Trademark	Blauberg					
Model	Deco 100					
Specific energy consumption (SEC) (kWh/(m²/a))	Cold		Average		Warm	
	-31	B	-14	E	-5	F
Type of ventilation unit	Unidirectional					
Type of drive installed	Multi-speed					
Type of heat recovery system	None					
Maximum flow rate (m³/h)	105					
Electric power input (W)	14					
Reference flow rate (m³/s)	0.02					
Specific power input (SPI) (W/(m³/h))	0.086					
Control typology	Manual control					
Maximum external leakage rates (%)	2.7					
Declared typology	RVU UVU					
Sound power level (dB(A))	57					
The annual electricity consumption (AEC) (kWh/a)	Cold		Average		Warm	
	100		100		100	
The annual heating saved (AHS) (kWh/a)	Cold		Average		Warm	
	3400		1700		800	