

CIVIC EC D1B 300 S21 V.2

The CIVIC EC DB V.2 units are designed for single-room ventilation of schools, offices and other public and commercial premises

- Sound pressure level LpA at 3 m: 34
- Sound pressure level LpA at 1 m: 44
- Heat exchanger type: Counter flow
- Heat exchanger material: Polystyrene
- Supply filter: ISO ePM1 60 % (F7)
- Extract filter: ISO Coarse >60% (G4)
- Sound-insulated casing
- Bypass: Auto
- BMS protocol: ModBus
- Control: Smartphone
- Casing material: Coated steel
- Humidity sensor: Optional
- CO2 sensor: Optional
- PM2.5 sensor: Optional
- Temperature sensor: Built-in

	Unit of measurement	CIVIC EC D1B 300 S21 V.2
Connected air duct size	mm	200
Phases	-	1
Minimum supply voltage	V	230
Maximum supply voltage	V	230
Power supply frequency	Hz	50/60
Rated power	W	204
Unit current	A	1.5
Maximum airflow	m³/h	300
Sound pressure level LpA at 3 m	dB(A)	34
Sound pressure level LpA at 1 m	dB(A)	44
Heat recovery efficiency, max	%	92
Heat exchanger type	-	Counter flow
Heat exchanger material	-	Polystyrene
Weight	kg	78
Supply filter	-	ISO ePM1 60 % (F7)
Extract filter	-	ISO Coarse >60% (G4)
Transported air temperature (max)	°C	40
Transported air temperature (min)	°C	-25
Ambient air temperature max	°C	40

Ambient air temperature min	°C	1
Ingress protection rating	-	IP20
Ambient air humidity max	%	60
Ingress protection rating of the drive	-	IP44
Minimum wall thickness	mm	100
Maximum wall thickness	mm	2000

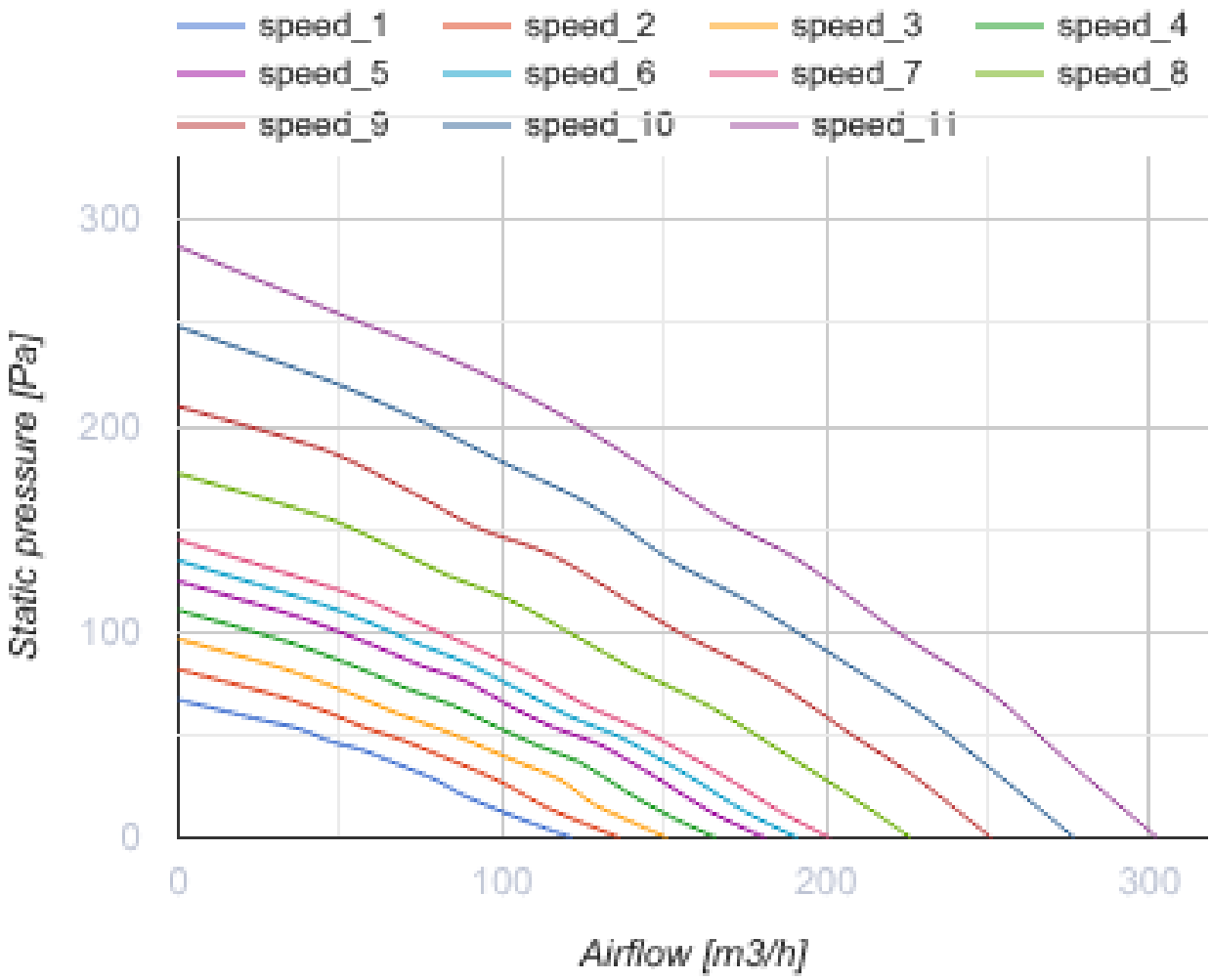

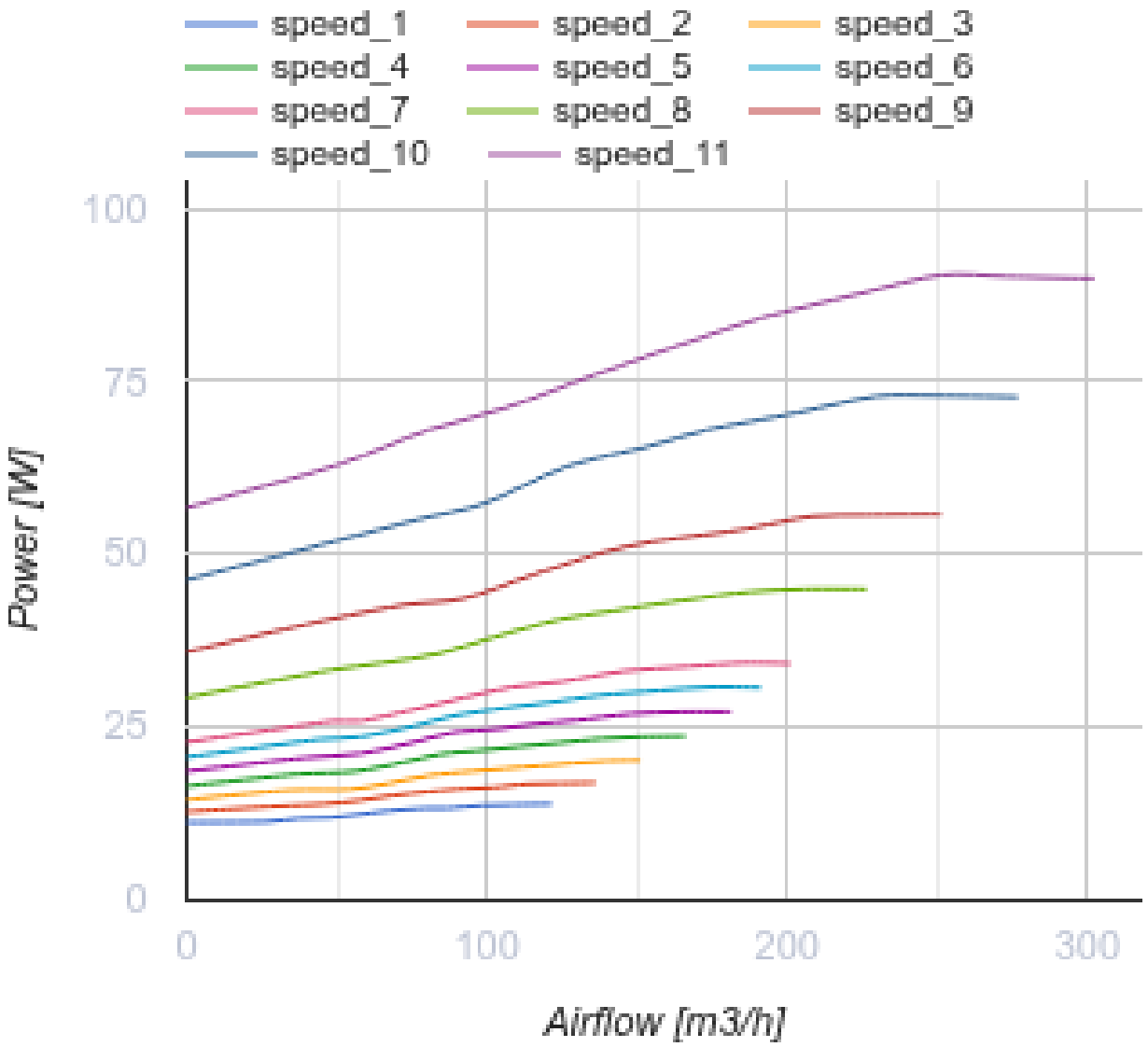

Dimensions

ØD	H	H1	H2	L	L1	L2	L3	L4	W / B	W1 / B1	W2 / B2	W3 / B3
200	402	450	45	1200	764	218	1122	445	1139	181	530	281

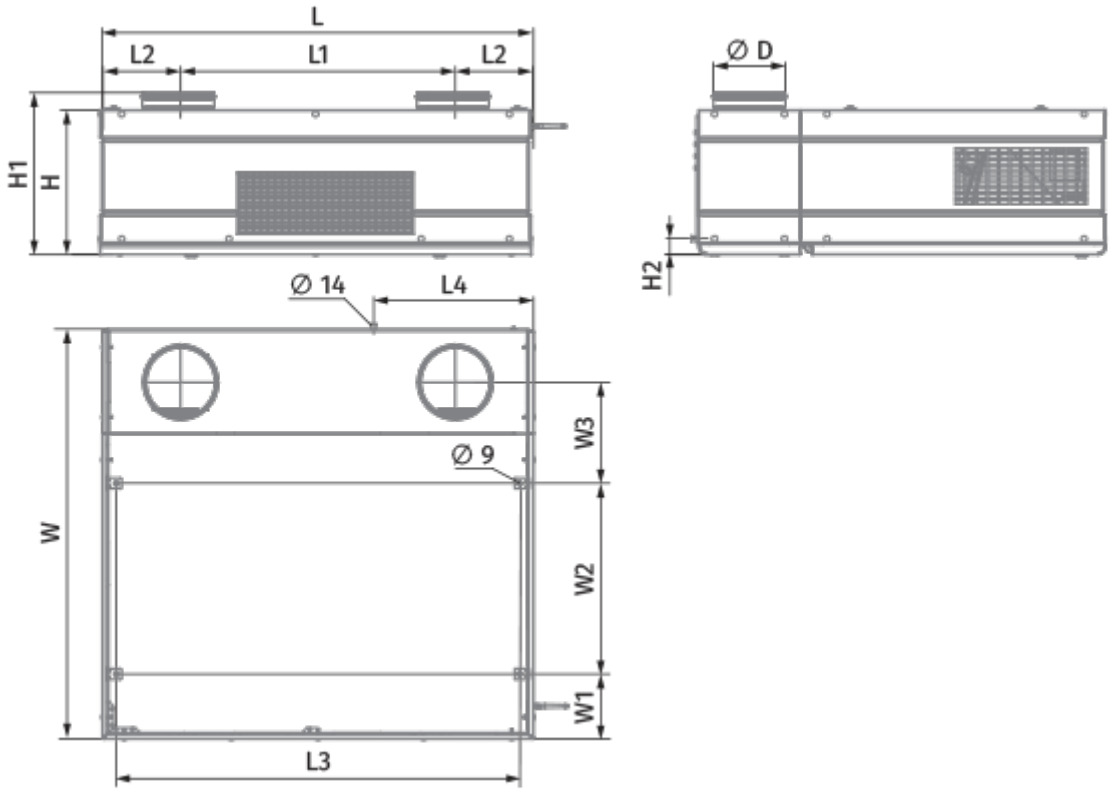

Accessories

Condensation drainage

Name	Photo	Description
SFK 20x32		Hydraulic syphon for condensate drainage

Condensation drainage

Name	Photo	Description
CP-2		Drain pump

Control Panels

Name	Photo	Description
S25		LCD control panel
S22		Control panels

S22 Wi-Fi		Control panels

CO2 sensors

Name	Photo	Description
CD-1		CO2 sensors
CD-2		CO2 sensors
CD-3		Carbon dioxide sensor

Humidity sensors

Name	Photo	Description
FS2		Humidity sensor
HR-S		Electro-mechanical humidistat

Sensors

Name	Photo	Description
DPWC11200		Humidity and temperature sensor
DPWQ40200		CO2 sensor

VOC sensors

Name	Photo	Description
DPWQ30600		VOC sensor

Other accessories

Name	Photo	Description

FP 320x211x48 F7		F7 panel filter
FP 320x373x48 G4		G4 panel filter

Other accessories

Name	Photo	Description
VDC Civic 300 DB		Module of vertical duct connection