

Ceileo DC 110 H

Centrifugal extract low-noise and low-watt fans for ceiling mounting

- Sound pressure level LpA at 3 m: 25
- Impeller type: Centrifugal impeller with forward curved blades
- Casing material: Galvanized steel
- Backdraft protection: Backdraft damper
- Humidity sensor
- Timer: Turn off timer

	Unit of measurement	Ceileo DC 110 H
Connected air duct size	mm	100/150
Maximum supply voltage	V	240
Minimum supply voltage	V	120
Power supply frequency	Hz	50/60
Rated power	W	19
Unit current	A	0.18
Maximum airflow	m³/h	187
Rotation speed at 50hz	-	1100
Sound pressure level LpA at 3 m	dB(A)	25
Weight	kg	5.3
Ambient air temperature min	°C	1
Ambient air temperature max	°C	40
Ingress protection rating	-	IPX2

Dimensions

Ø D	Ø d	L1	L2	A	B	C	E	H	h
148	98	100	45	330	258	260	395	188	18

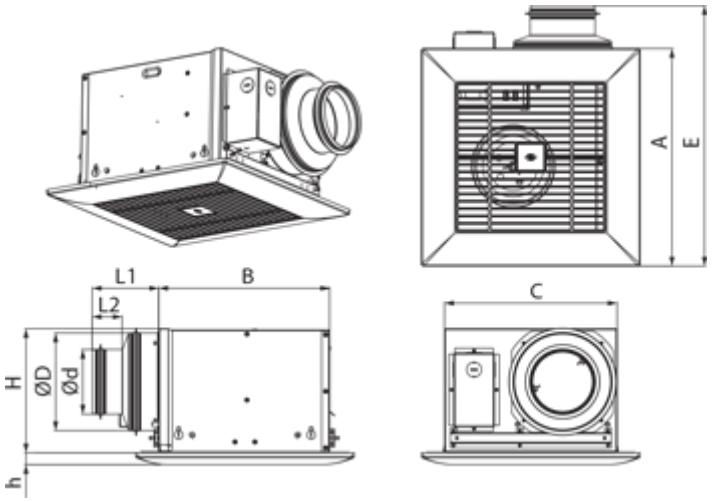
A
E
L1
B
L2
H
ØD
Ød
h
C

Ecodesign

Trademark	Blauberg					
Model	Ceileo DC 110 H					
Specific energy consumption (SEC) (kWh/(m²/a))	Cold		Average		Warm	
	-53.9	A+	-26.9	B	-11.4	E
Type of ventilation unit	Unidirectional					
Type of drive installed	Variable speed					
Type of heat recovery system	None					
Maximum flow rate (m³/h)	90					
Electric power input (W)	14					
Reference flow rate (m³/s)	0.044					
Reference pressure difference (Pa)	50					
Specific power input (SPI) (W/(m³/h))	0.109					
Control typology	Local demand control					
Maximum external leakage rates (%)	2.7					
Declared typology	RVU UVU					
Sound power level (dB(A))	49					
The annual electricity consumption (AEC) (kWh/a)	Cold		Average		Warm	
	58		58		58	
The annual heating saved (AHS) (kWh/a)	Cold		Average		Warm	
	5536		2830		1280	

Accessories

Speed control switches

Name	Photo	Description
CDP-2/10		Multi-speed switch

Flexible ducts

Name	Photo	Description