

Ceileo 300 Light T

Centrifugal extract low-noise and low-watt fans for ceiling mounting

- Sound pressure level LpA at 3 m: 32
- Lighting
- Impeller type: Centrifugal impeller with forward curved blades
- Casing material: Galvanized steel
- Backdraft protection: Backdraft damper
- Timer: Turn off timer

	Unit of measurement	Ceileo 300 Light T			
Speed	-	1	2	1	2
Connected air duct size	mm	150			
Phases	-	1			
Minimum supply voltage	V	230			
Maximum supply voltage	V	230			
Power supply frequency	Hz	50		60	
Rated power	W	31	49	35	63
Unit current	A	0.15	0.22	0.17	0.28
Maximum airflow	m³/h	220	300	200	320
Rotation speed at 50hz	-	936	1254	888	1320
Sound pressure level LpA at 3 m	dB(A)	28	31	27	32
Weight	kg	6.2			
Ambient air temperature min	°C	1			
Ambient air temperature max	°C	40			
Ingress protection rating	-	IPX2			

Dimensions

Ø D	L1	A	B	C	E	H	h	a	b
149	50	330	258	260	395	188	62	208	123

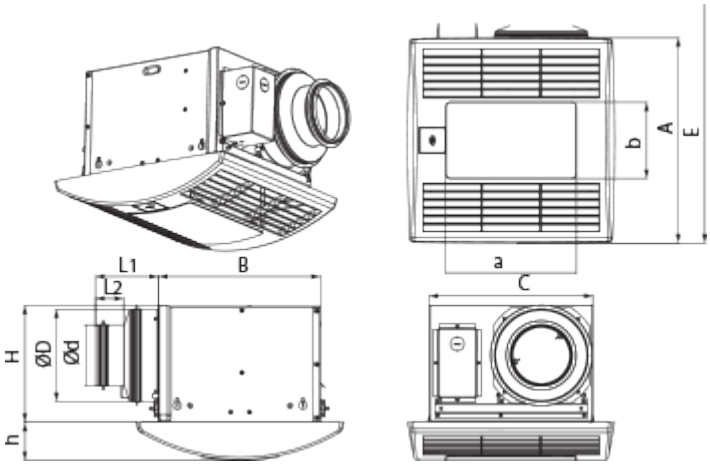

Ecodesign

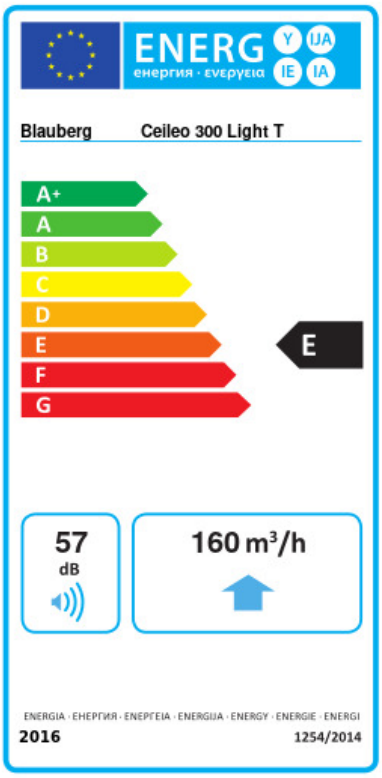

Trademark	Blauberg					
Model	Ceileo 300 Light T					
Specific energy consumption (SEC) (kWh/(m²/a))	Cold		Average		Warm	
	-32.1	B	-14.2	E	-3.9	F
Type of ventilation unit	Unidirectional					
Type of drive installed	2-speed					
Type of heat recovery system	None					
Maximum flow rate (m³/h)	160					
Electric power input (W)	44					
Reference flow rate (m³/s)	0.044					
Reference pressure difference (Pa)	50					
Specific power input (SPI) (W/(m³/h))	0.156					
Control typology	Clock control					
Maximum external leakage rates (%)	2.7					
Declared typology	RVU UVU					
Sound power level (dB(A))	57					
The annual electricity consumption (AEC) (kWh/a)	Cold		Average		Warm	
	183		183		183	
The annual heating saved (AHS) (kWh/a)	Cold		Average		Warm	
	3667		1874		848	

Accessories

Speed control switches

Name	Photo	Description
CDP-2/10		Multi-speed switch

Flexible ducts

Name	Photo	Description