

Ceileo 200 H

Centrifugal extract low-noise and low-watt fans for ceiling mounting

- Sound pressure level LpA at 3 m: 28
- Impeller type: Centrifugal impeller with forward curved blades
- Casing material: Galvanized steel
- Backdraft protection: Backdraft damper
- Humidity sensor
- Timer: Turn off timer

	Unit of measurement	Ceileo 200 H			
Speed	-	1	2	1	2
Connected air duct size	mm	150/100			
Phases	-	1			
Minimum supply voltage	V	230			
Maximum supply voltage	V	230			
Power supply frequency	Hz	50		60	
Rated power	W	20	29	21	34
Unit current	A	0.1	0.13	0.11	0.15
Maximum airflow	m³/h	130	210	130	225
Rotation speed at 50hz	-	714	1026	588	936
Sound pressure level LpA at 3 m	dB(A)	24	27	24	28
Weight	kg	5.3			
Ambient air temperature min	°C	1			
Ambient air temperature max	°C	40			
Ingress protection rating	-	IPX2			

Dimensions

Ø D	Ø d	L1	L2	A	B	C	E	H	h
148	98	100	45	330	258	260	395	188	18

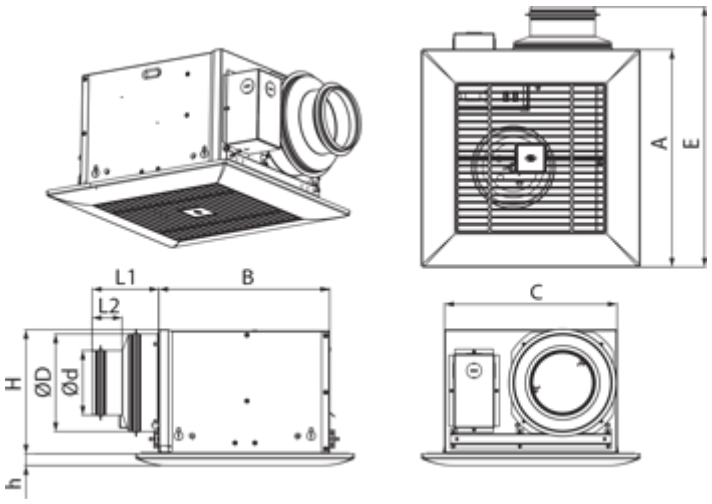

Ecodesign

Trademark	Blauberg					
Model	Ceileo 200 H					
Specific energy consumption (SEC) (kWh/(m²/a))	Cold		Average		Warm	
	-51.4	A+	-24.3	C	-8.8	F
Type of ventilation unit	Unidirectional					
Type of drive installed	2-speed					
Type of heat recovery system	None					
Maximum flow rate (m³/h)	64					
Electric power input (W)	25.5					
Reference flow rate (m³/s)	0.024					
Reference pressure difference (Pa)	50					
Specific power input (SPI) (W/(m³/h))	0.212					
Control typology	Local demand control					
Maximum external leakage rates (%)	2.7					
Declared typology	RVU UVU					
Sound power level (dB(A))	45					
The annual electricity consumption (AEC) (kWh/a)	Cold		Average		Warm	
	158		158		158	
The annual heating saved (AHS) (kWh/a)	Cold		Average		Warm	
	5536		2830		1280	

Accessories

Speed control switches

Name	Photo	Description
CDP-2/10		Multi-speed switch

Flexible ducts

Name	Photo	Description