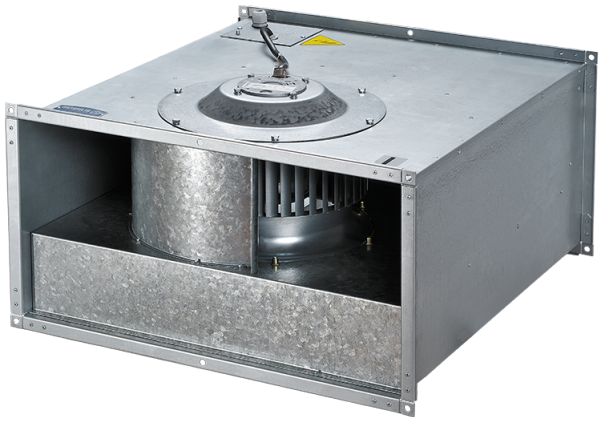

Box-F 1000x500 6D

Centrifugal inline fans with forward curved blades

- Sound pressure level LpA at 3 m: 61
- Impeller type: Centrifugal impeller with forward curved blades
- Casing material: Galvanized steel
- Installation in any position

	Unit of measurement	Box-F 1000x500 6D
Connected air duct size	mm	1000x500
Phases	-	3
Minimum supply voltage	V	400
Maximum supply voltage	V	400
Power supply frequency	Hz	50
Rated power	W	3870
Unit current	A	7
Maximum airflow	m^3/h	9540
Rotation speed at 50hz	-	930
Sound pressure level LpA at 3 m	dB(A)	61
Weight	kg	95
Transported air temperature (max)	°C	55
Transported air temperature (min)	°C	-20
Ingress protection rating	-	IPX4
Ingress protection rating of the drive	-	IP44
Impeller material	-	Galvanized steel

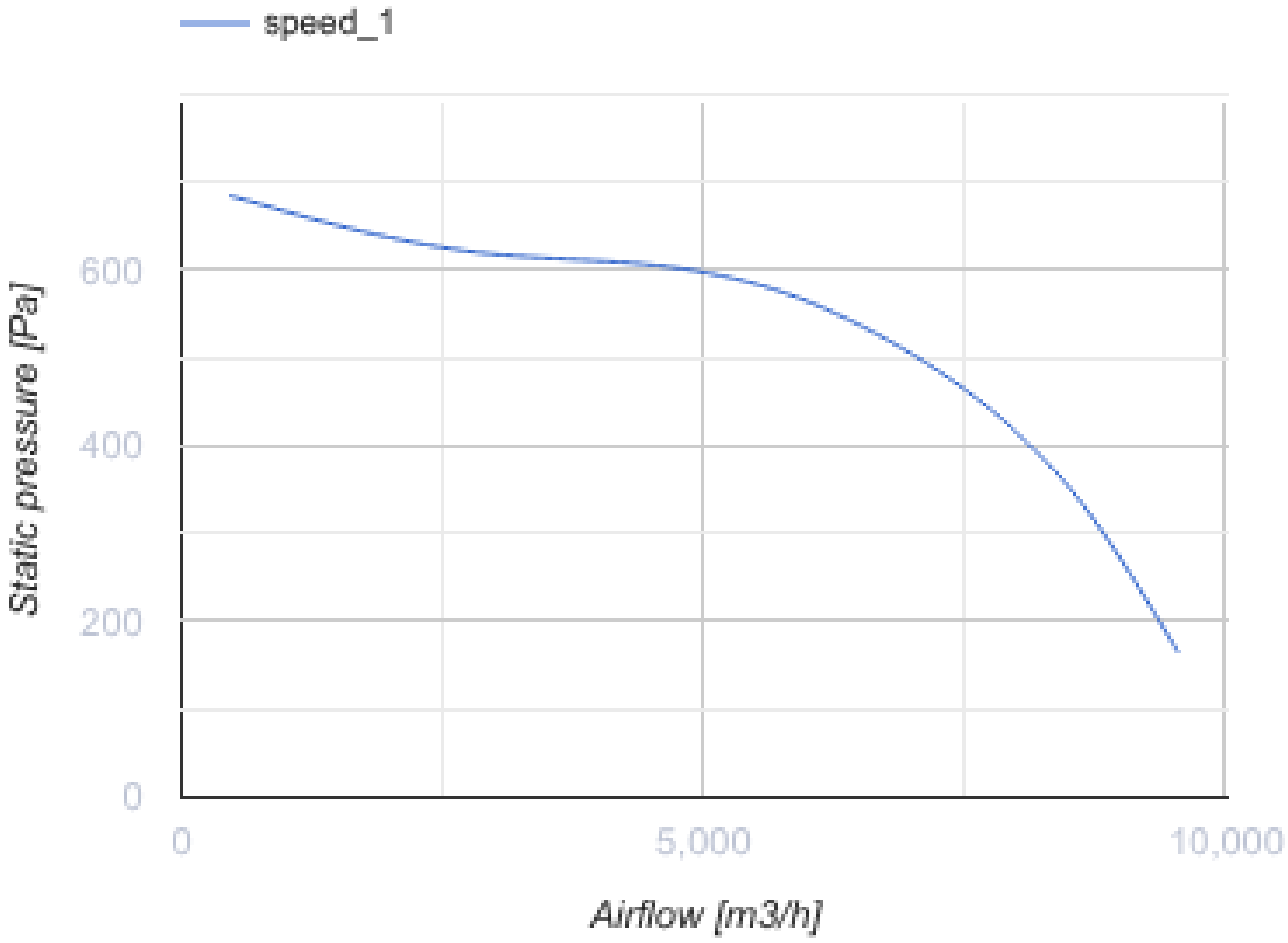
speed_1
Static pressure [Pa]
600
400
200
0
0
5,000
10,000
Airflow [m3/h]

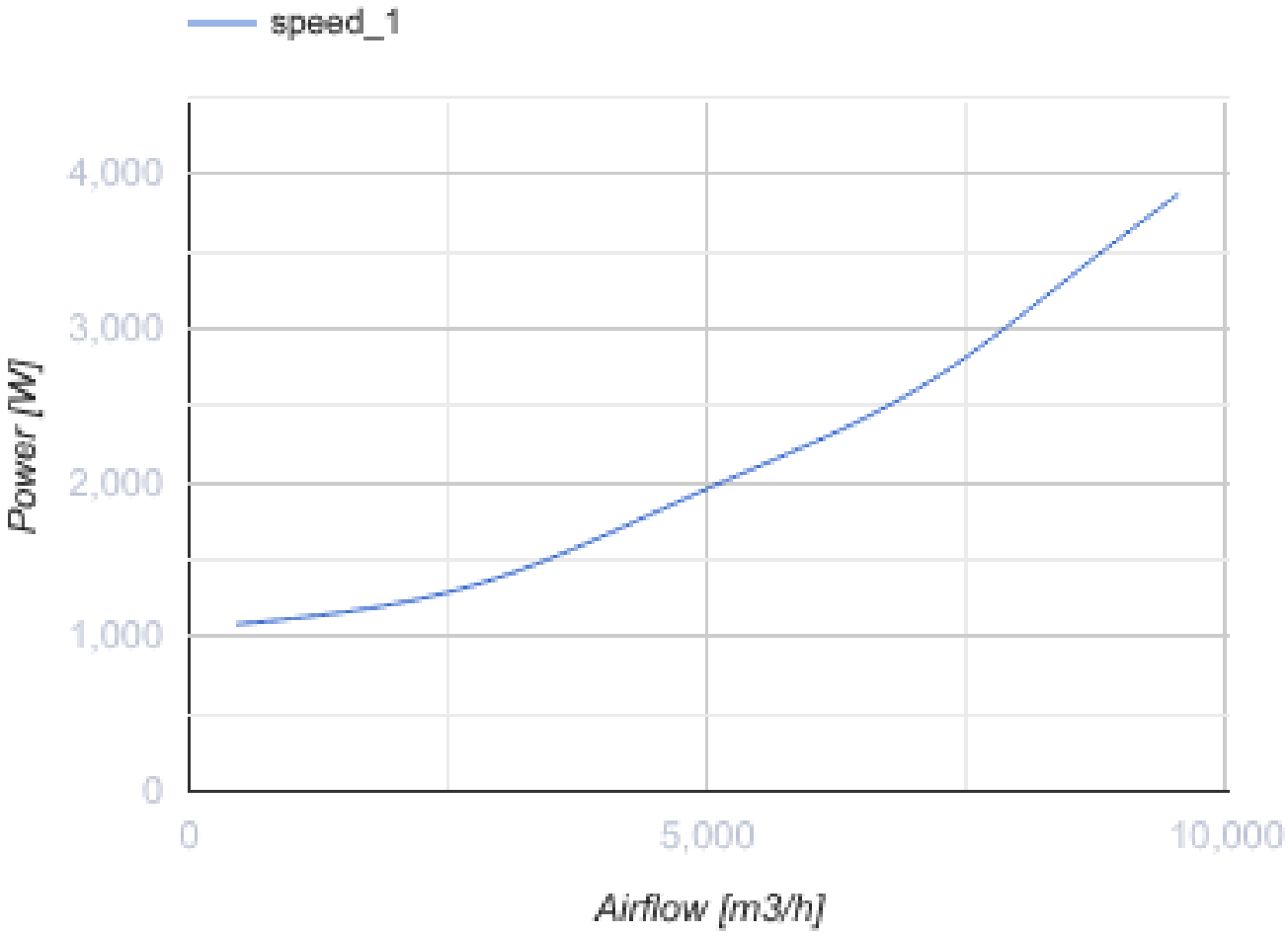

Dimensions

B	B1	B2	H	H1	H2	H3	L
1000	1020	1040	500	520	540	580	954

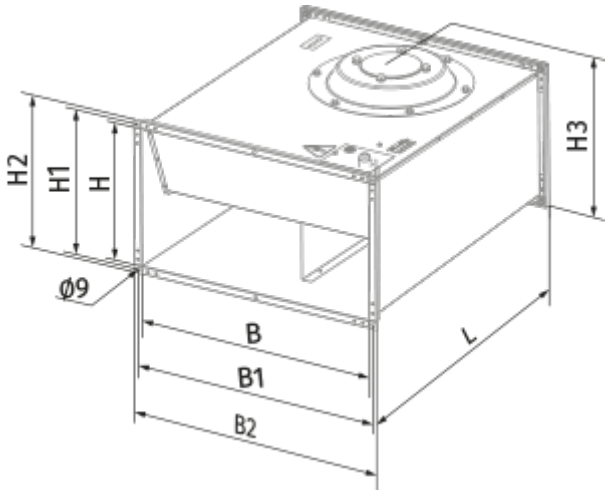
H2
H1
H
H3
Ø9
B
B1
B2
L

Ecodesign

Trademark	Blauberg
Model	Box-F 1000x500 6D
Type of drive installed	External MSD or VSD
Type of heat recovery system	None
Nominal external pressure (Pa)	590
Maximum external leakage rates (%)	2.7
Static efficiency (%)	43.2
Declared typology	NRVU UVU
Effective electric power input (kW)	2.01
Sound power level (dB(A))	81

Accessories

Transformer speed controllers

Name	Photo	Description
CDR5E D1.5 M		Three phase speed controller
CDR5E D4.0 M		Three phase speed controller
CDR5E D6.0 M		Three phase speed controller
CDR5E D8.0 M		Three phase speed controller
CDR5E D11.0 M		Three phase speed controller
CDR5E D14.0 M		Three phase speed controller