

Box-D 150

Centrifugal ceiling fans in metal casings with plastic front panels

• Sound pressure level LpA at 3 m: 52
• Impeller type: Centrifugal impeller with backward curved blades
• Backdraft protection: Backdraft damper

	Unit of measurement	Box-D 150
Connected air duct size	mm	150
Phases	-	1
Minimum supply voltage	V	230
Maximum supply voltage	V	230
Power supply frequency	Hz	50/60
Rated power	W	112
Unit current	A	0.5
Maximum airflow	m^3/h	485
Rotation speed at 50hz	-	2465
Sound pressure level LpA at 3 m	dB(A)	52
Weight	kg	6.5
Transported air temperature (max)	°C	50
Transported air temperature (min)	°C	-25
Ingress protection rating	-	IPX4
Ingress protection rating of the drive	-	IP44

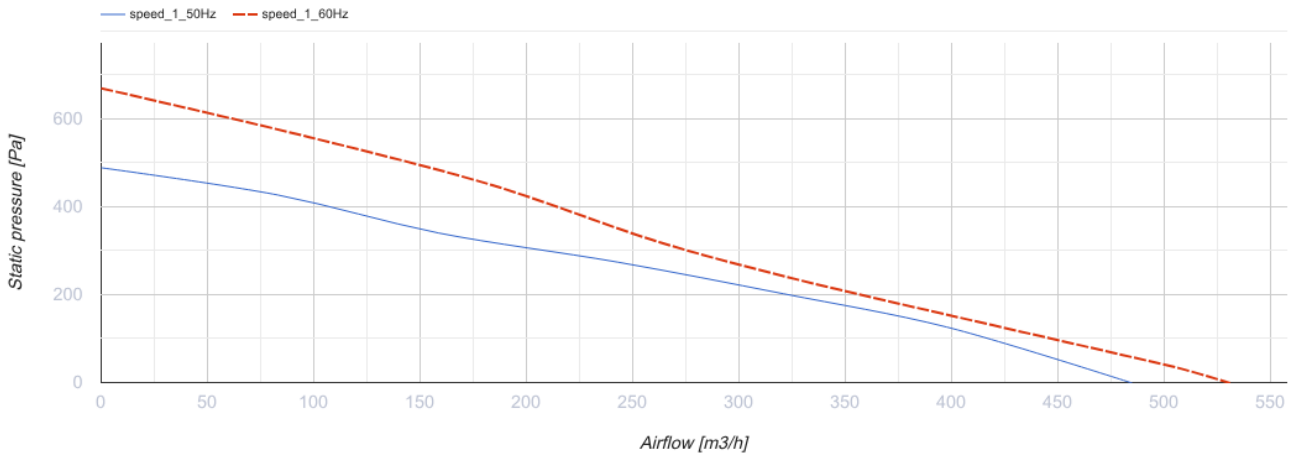

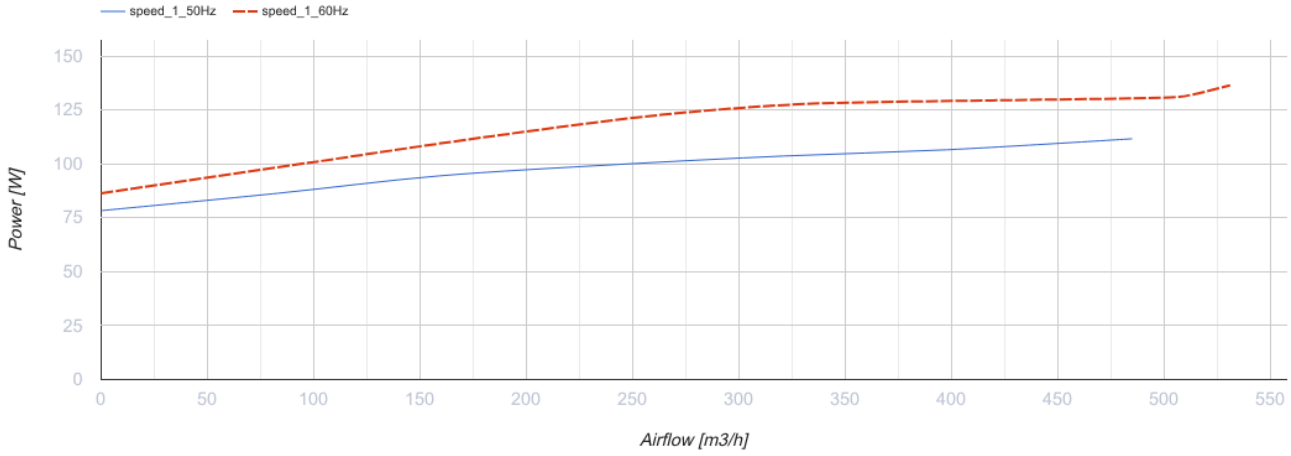

Dimensions

ØD	B	H	L
149	355	180	419

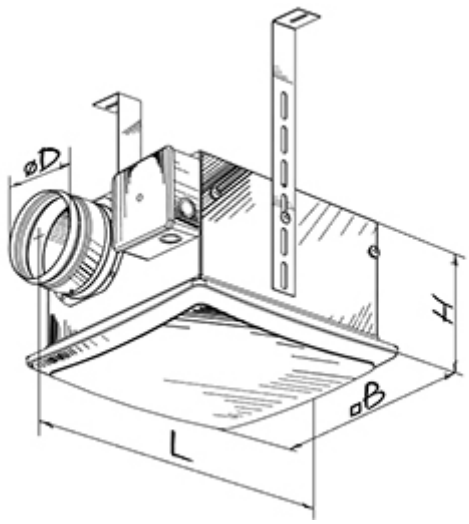

Accessories

Humidity sensors

Name	Photo	Description
HSE / HSI 1.5		Sensors
TE / TI 1.5		Timers
IRSE / IRSI 1.5		Sensors