

# Box-D 150

Centrifugal ceiling fans in metal casings with plastic front panels

- Sound pressure level LpA at 3 m: 52
- Impeller type: Centrifugal impeller with backward curved blades
- Casing material: Galvanized steel
- Backdraft protection: Backdraft damper

| | Unit of measurement | Box-D 150 |
|---|---|---|
| Connected air duct size | mm | 150 |
| Phases | - | 1 |
| Minimum supply voltage | V | 230 |
| Maximum supply voltage | V | 230 |
| Power supply frequency | Hz | 50/60 |
| Rated power | W | 112 |
| Unit current | A | 0.5 |
| Maximum airflow | $m^3/h$ | 485 |
| Rotation speed at 50hz | - | 2465 |
| Sound pressure level LpA at 3 m | dB(A) | 52 |
| Weight | kg | 6.5 |
| Transported air temperature (max) | °C | 50 |
| Transported air temperature (min) | °C | -25 |
| Ingress protection rating | - | IPX4 |
| Ingress protection rating of the drive | - | IP44 |
| Impeller material | - | Plastic |

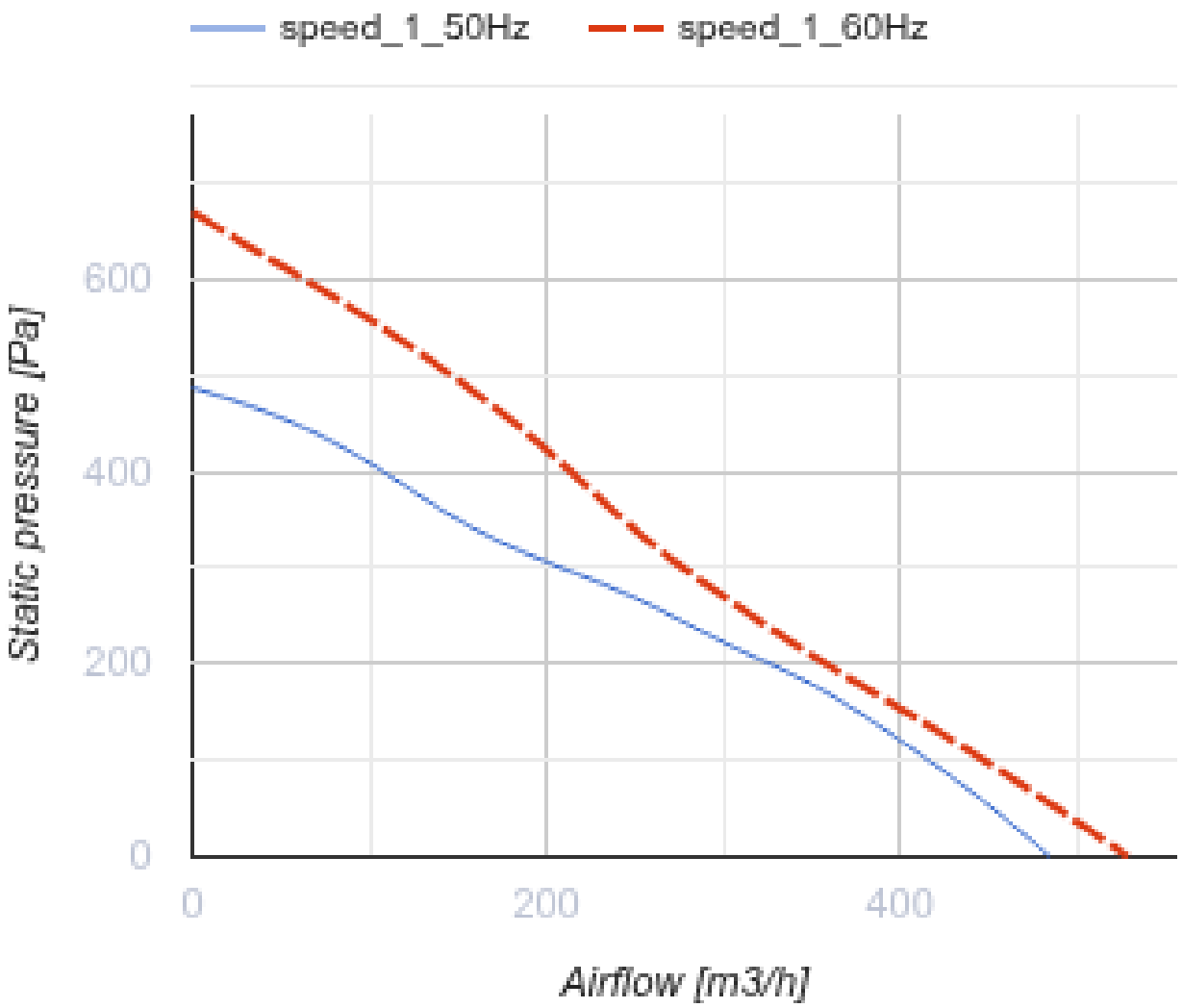
speed_1_50Hz
speed_1_60Hz
Static pressure [Pa]
600
400
200
0
0
200
400
Airflow [m3/h]

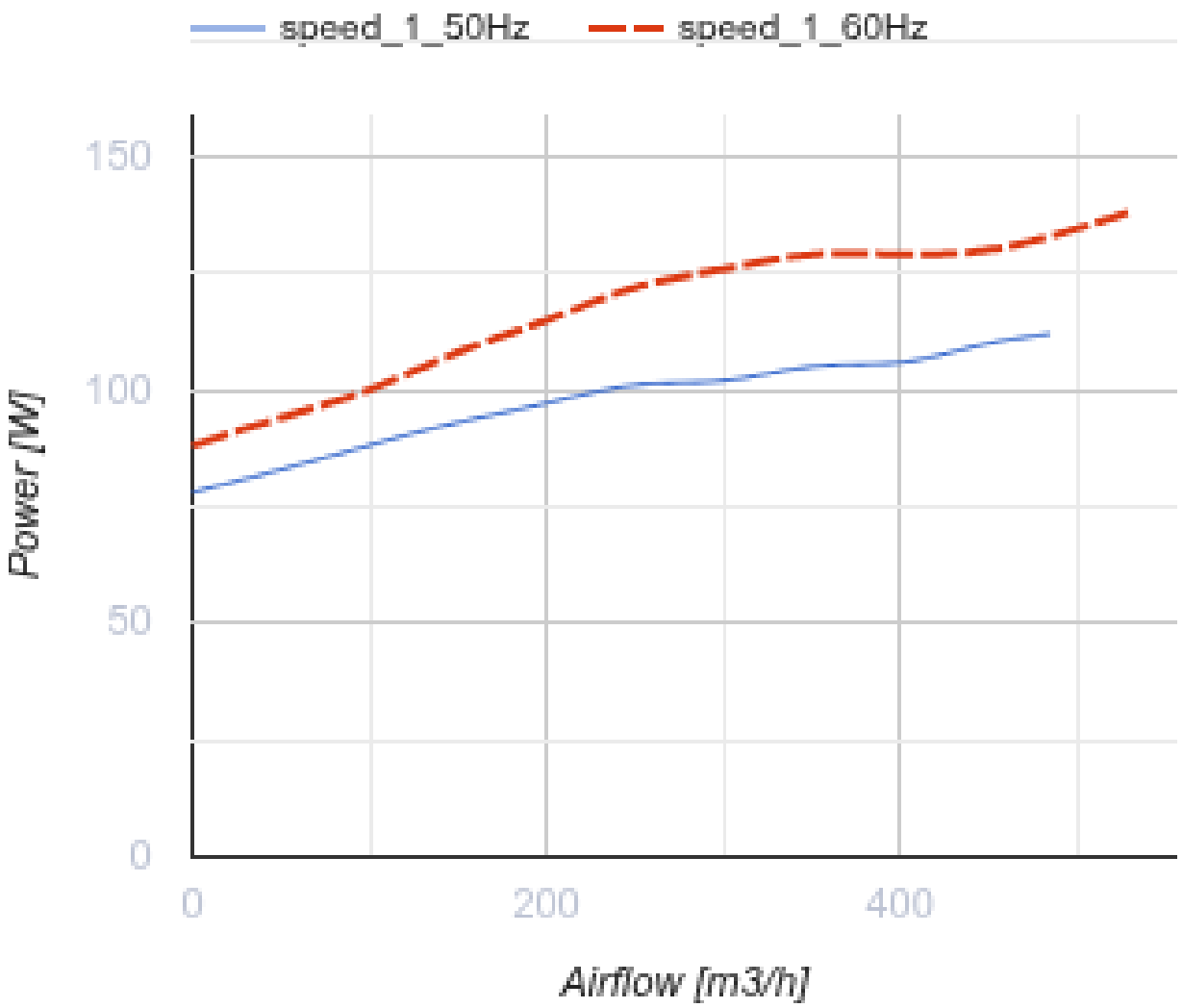


## Dimensions

| ØD | B | H | L |
|---|---|---|---|
| 149 | 355 | 180 | 419 |

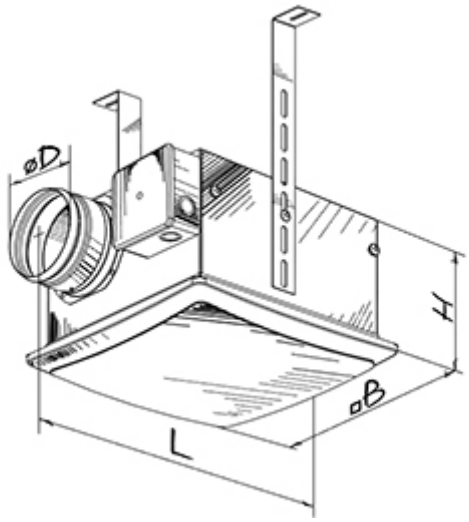


## Accessories

### Humidity sensors

| Name | Photo | Description |
|---|---|---|
| HSE / HSI 1.5 |  | Sensors |
| TE / TI 1.5 |  | Timers |
| IRSE / IRSI 1.5 |  | Sensors |