

Box 60x30 4E

Centrifugal inline fans with backward curved blades

- Sound pressure level LpA at 3 m: 52
- Impeller type: Centrifugal impeller with backward curved blades
- Casing material: Galvanized steel
- Installation in any position

	Unit of measurement	Box 60x30 4E
Connected air duct size	mm	600x300
Phases	-	1
Minimum supply voltage	V	220
Maximum supply voltage	V	240
Power supply frequency	Hz	50/60
Rated power	W	220
Unit current	A	0.9
Maximum airflow	m^3/h	2470
Rotation speed at 50hz	-	1400
Sound pressure level LpA at 3 m	dB(A)	52
Weight	kg	27.77
Transported air temperature (max)	°C	45
Transported air temperature (min)	°C	-25
Ingress protection rating	-	IPX4
Ingress protection rating of the drive	-	IP44
Impeller material	-	Aluminium

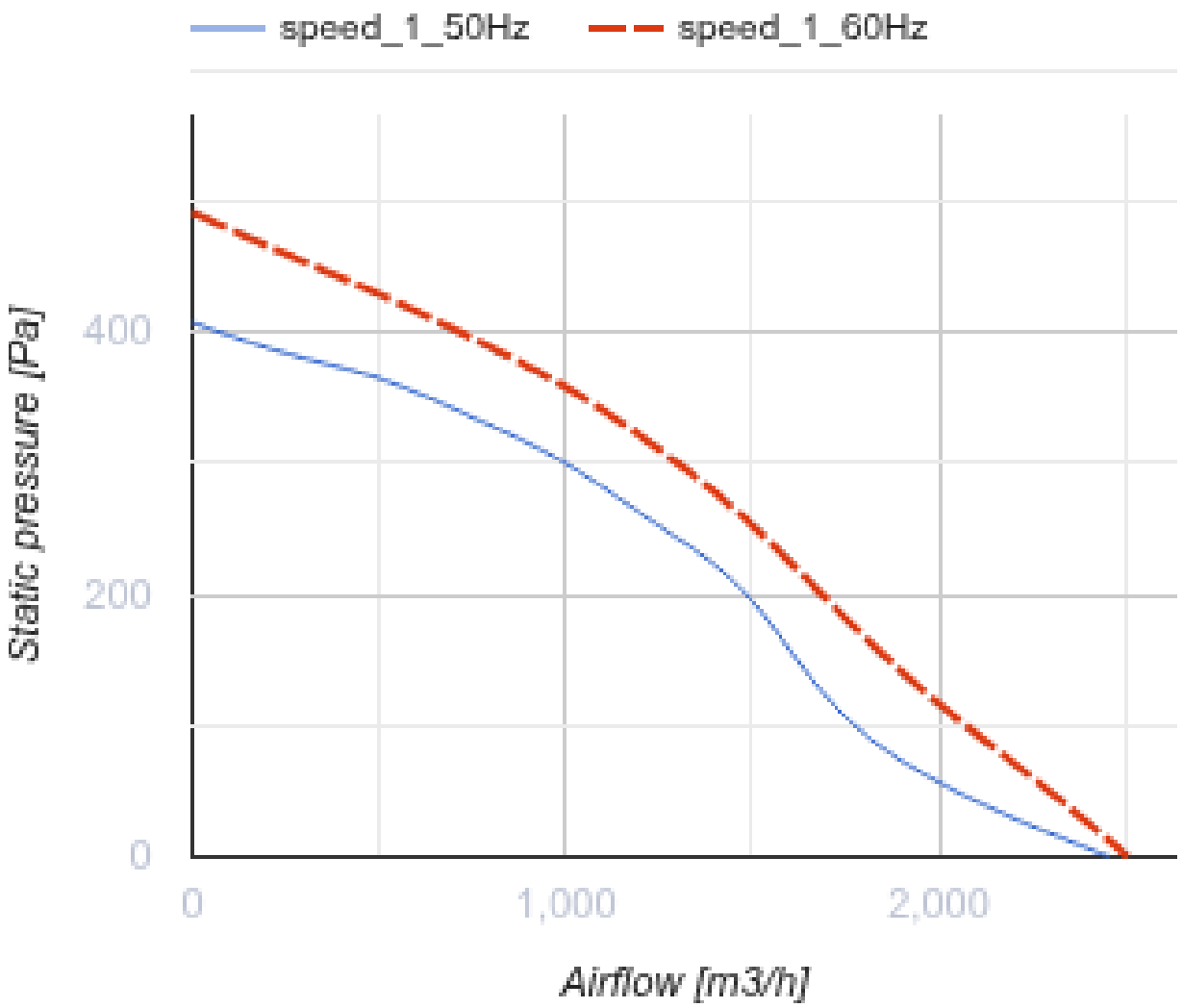
speed_1_50Hz
speed_1_60Hz
Static pressure [Pa]
400
200
0
0
1,000
2,000
Airflow [m3/h]

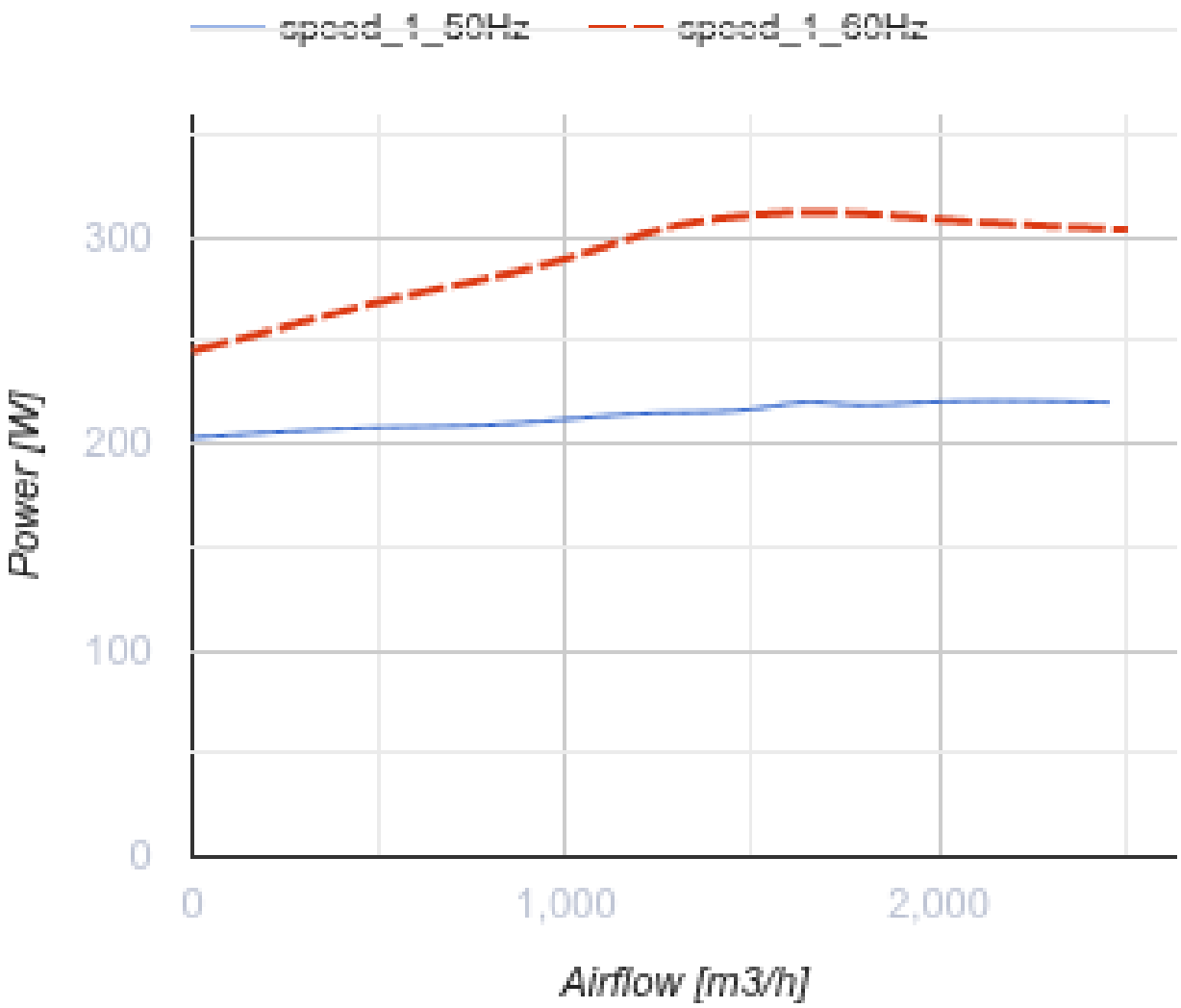

Dimensions

B	B1	H	H1	H2	L
600	640	300	340	342	680

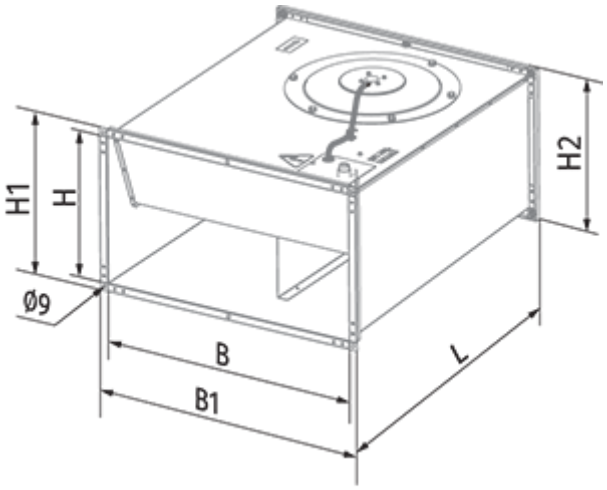
H1
H
H2
Ø9
B
B1
L

Ecodesign

Trademark	Blauberg
Model	Box 60x30 4E
Type of ventilation unit	Unidirectional
Type of drive installed	External MSD or VSD
Type of heat recovery system	None
Nominal external pressure (Pa)	300
Maximum external leakage rates (%)	2.7
Static efficiency (%)	39.6
Declared typology	NRVU UVU
Effective electric power input (kW)	0.21
Sound power level (dB(A))	75