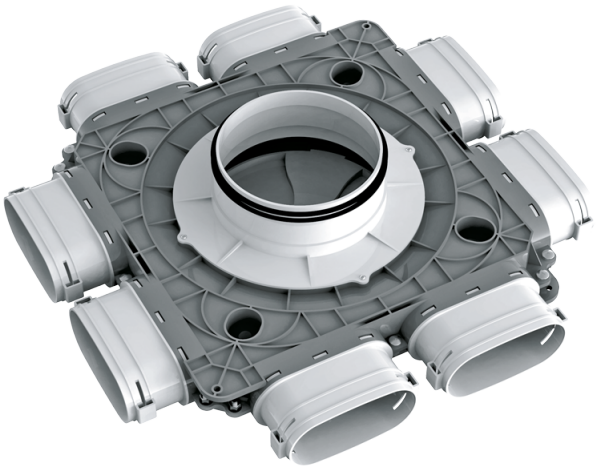

BlauFast SO 125/52x8 60P

Supply or exhaust ventilation systems of residential spaces. For distribution of air from the ventilation unit through the air ducts

- Casing material: Polypropylene

	Unit of measurement	BlauFast SO 125/52x8 60P
Connected air duct size	mm	52
Ambient air temperature min	°C	-20
Ambient air temperature max	°C	60

Dimensions

Ø D	H	L
124	121	488

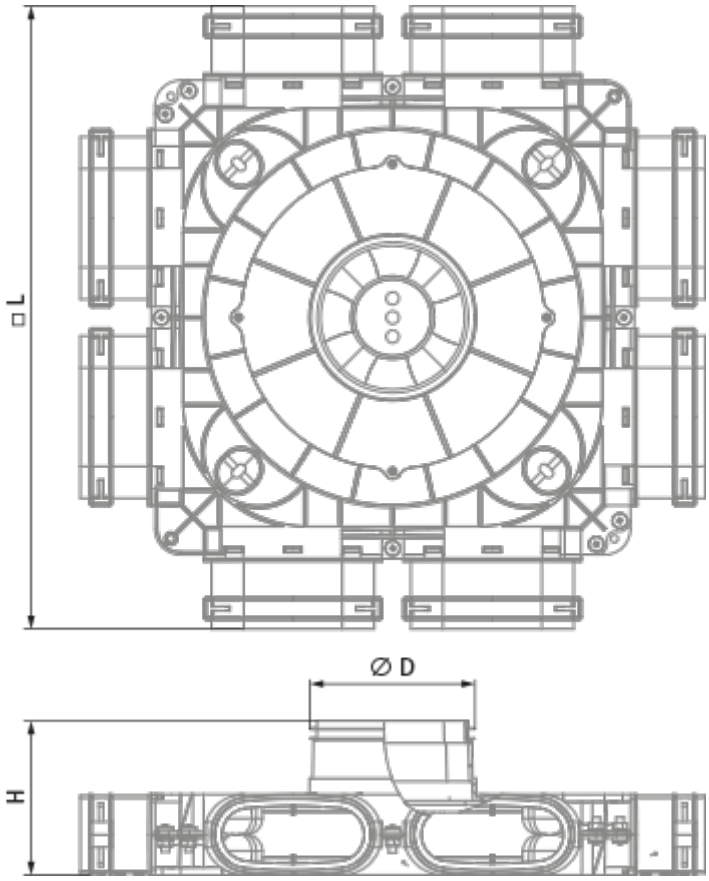
□L
Ø D
H