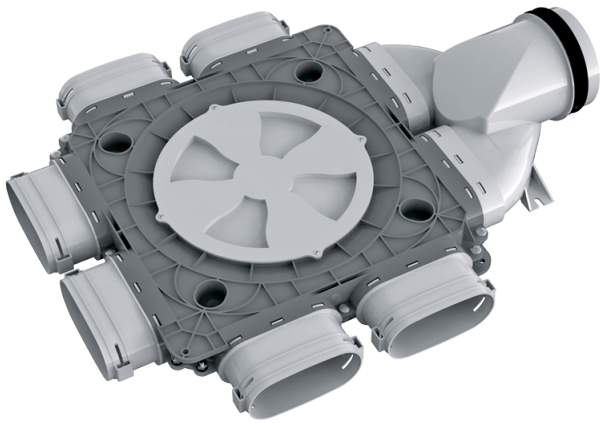

BlauFast SO 125/52x6 61P

For supply and exhaust systems in residential premises. Distribution of air from the ventilation unit through the ducts

- Casing material: Polypropylene

	Unit of measurement	BlauFast SO 125/52x6 61P
Connected air duct size	mm	52
Ambient air temperature min	°C	-20
Ambient air temperature max	°C	60

Dimensions

Ø D	L	W
130	640	295

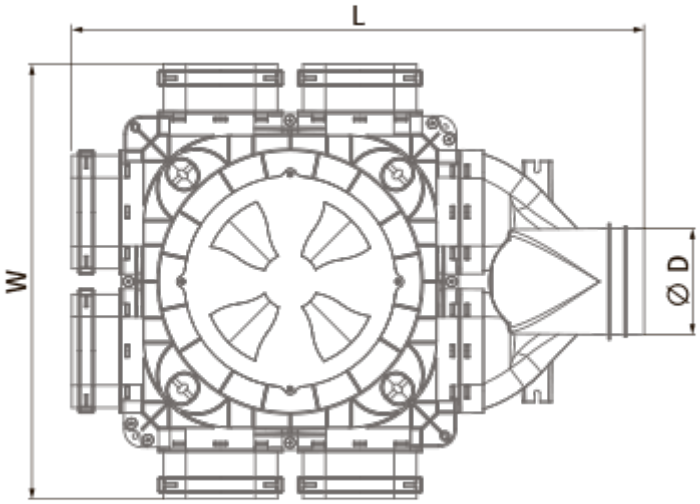
L
W
Ø D