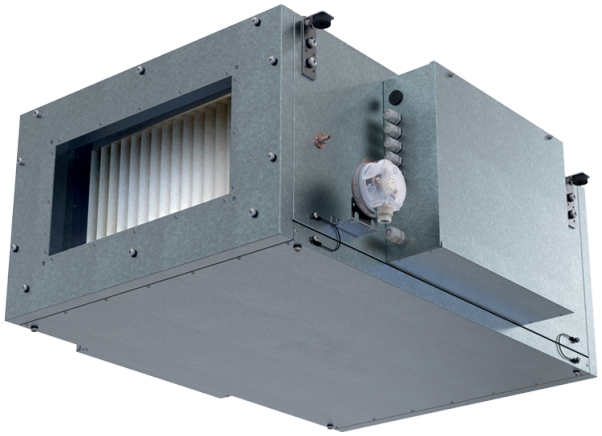

Blaubox EC ME 4000-24 S31

Supply ventilation units with an electric heater

- Power of electrical reheater: 24000
- Sound pressure level LpA at 3 m: 49
- Filter: Coarce 90% / G4 (option: ePM1 70% / F7)
- Sound-insulated casing
- Reheater: Electric
- BMS protocol: ModBus
- Control: Wired control panel
- Casing material: Aluzinc steel

	Unit of measurement	Blaubox EC ME 4000-24 S31
Connected air duct size	mm	700x400
Phases	-	3
Minimum supply voltage	V	400
Maximum supply voltage	V	400
Power supply frequency	Hz	50
Rated power	W	717
Power of electrical reheater	W	24000
Unit current	A	42.9
Maximum airflow	m³/h	5000
Sound pressure level LpA at 3 m	dB(A)	49
Weight	kg	60
Filter	-	Coarce 90% / G4 (option: ePM1 70% / F7)
Transported air temperature (max)	°C	40
Transported air temperature (min)	°C	-30
Ingress protection rating	-	IP22
Ingress protection rating of the drive	-	IP44

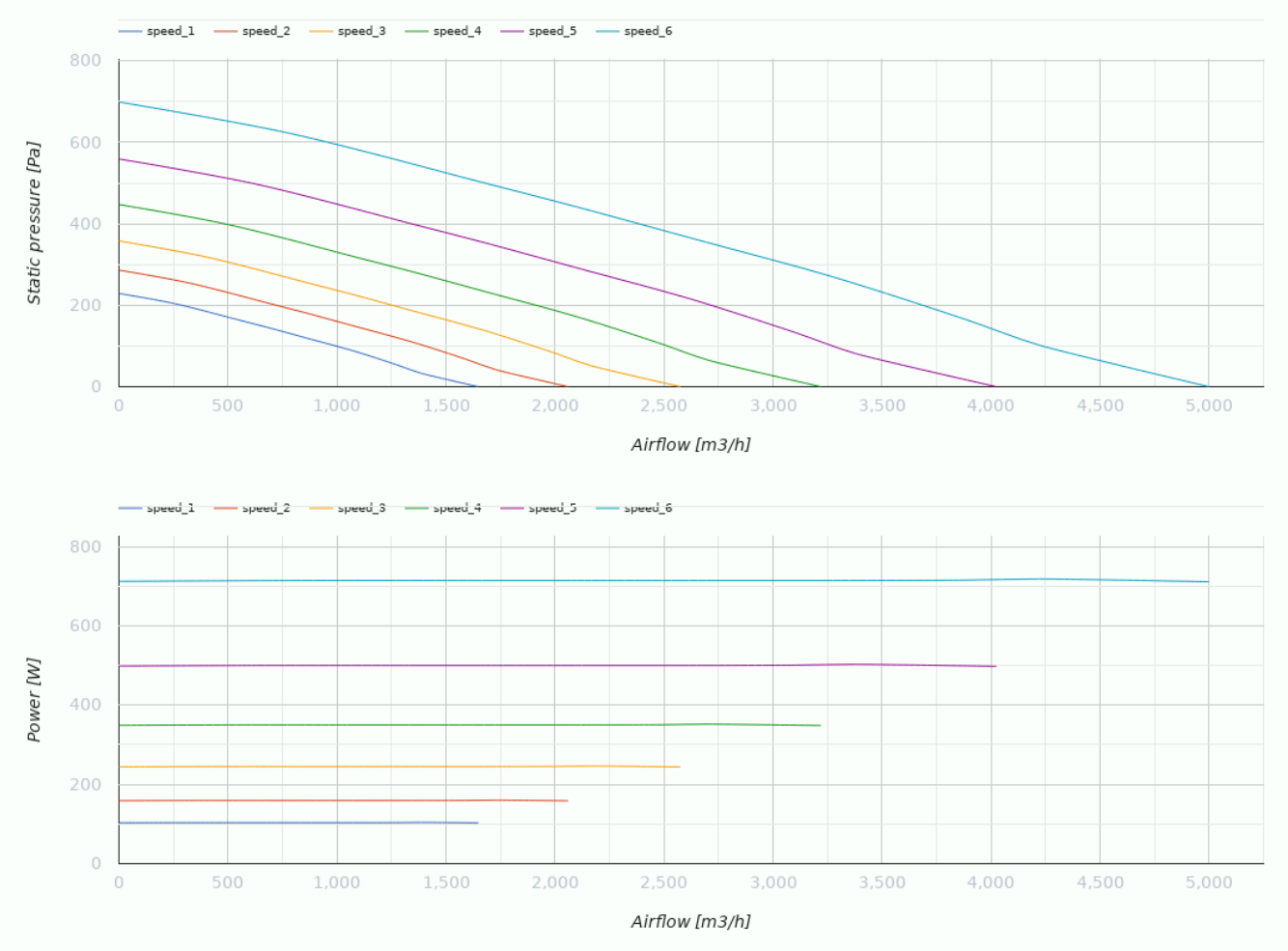

Dimensions

H	H1	L	L1	W	W1	W2	W3
550	400	1200	1070	940	993	1087	700

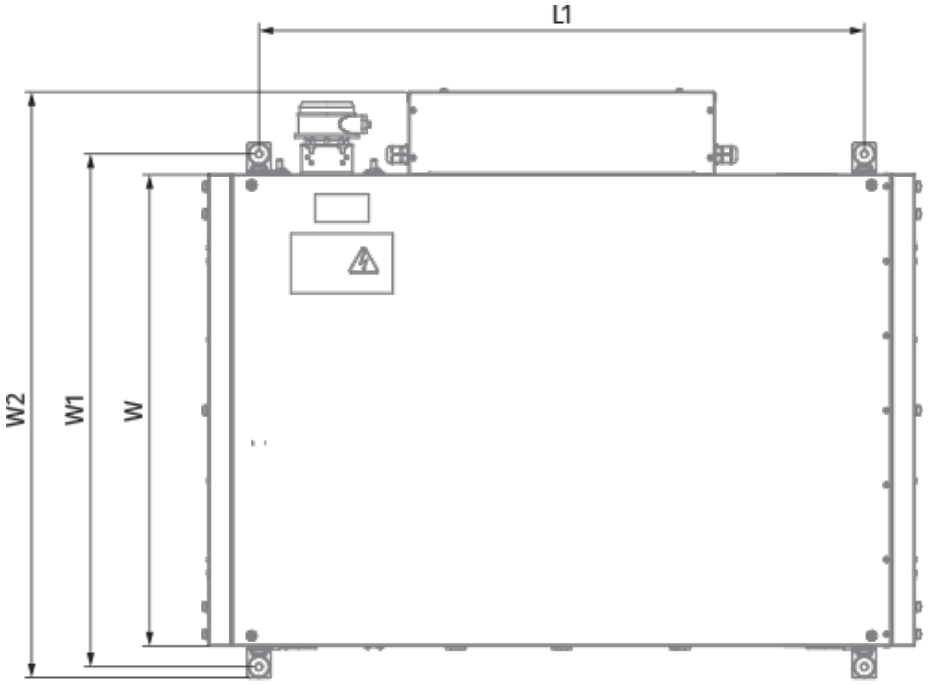
L1
W2
W1
W

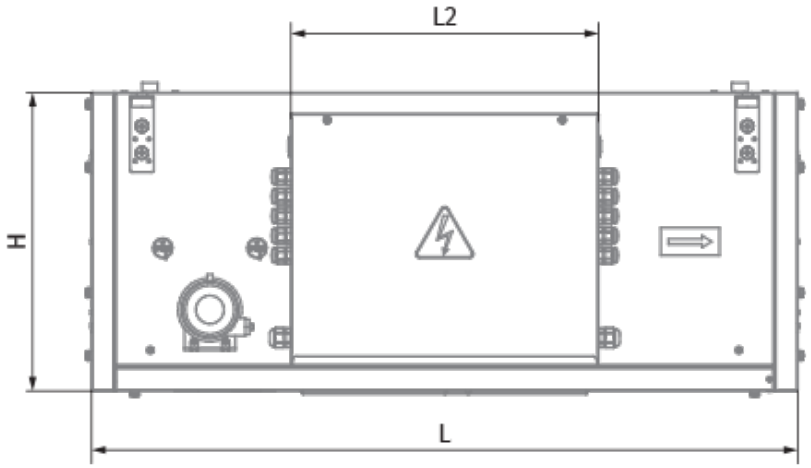
L2
H
L

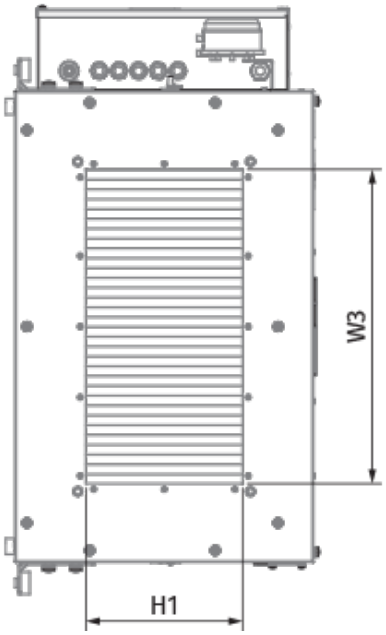
W3
H1

Ecodesign

Trademark	Blauberg
Model	Blaubox EC ME 4000-24 S31
Type of drive installed	Integrated VSD
Type of heat recovery system	None
Nominal external pressure (Pa)	250
Maximum external leakage rates (%)	4
Static efficiency (%)	36.1
Declared typology	NRVU UVU
Effective electric power input (kW)	0.718
Face velocity at design flow rate (m/s)	2.182
Energy performance of filters	B
Sound power level (dB(A))	70

Accessories

For rectangular ducts

Name	Photo	Description
SD 70x40	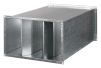	Silencers for rectangular ducts

For rectangular ducts

Name	Photo	Description
EVA 70x40		Flexible anti-vibration connectors for rectangular ducts

Airflow regulators

Name	Photo	Description
SL 70x40		Air dampers for rectangular ducts

Other accessories

Name	Photo	Description
FP 874x485x80 ePM1 70% / F7		F7 panel filter
FP 874x485x80 Coarse 90% / G4		G4 panel filter

Electric actuators

Name	Photo	Description
Belimo TF24		Electric actuators
Belimo TF230		Electric actuators