

BLAUBOX E 800-6 Pro

Supply ventilation units

- Power of electrical reheater: 6000
- Sound pressure level LpA at 3 m: 30
- Sound-insulated casing
- Reheater: Electric
- Control: Remote Control
- Casing material: Galvanized steel

	Unit of measurement	BLAUBOX E 800-6 Pro
Connected air duct size	mm	200
Phases	-	3
Minimum supply voltage	V	400
Maximum supply voltage	V	400
Power supply frequency	Hz	50
Rated power	W	193
Power of electrical reheater	W	6000
Unit current	A	8.7
Maximum airflow	m³/h	810
Rotation speed at 50hz	-	2780
Sound pressure level LpA at 3 m	dB(A)	30
Weight	kg	52
Transported air temperature (max)	°C	55
Transported air temperature (min)	°C	-25
Ambient air temperature max	°C	40
Ingress protection rating	-	IP22
Ambient air humidity max	%	80
Ingress protection rating of the drive	-	IP44

Dimensions

ØD	B	B1	H	L	L1
199	487	526.5	513	835	684

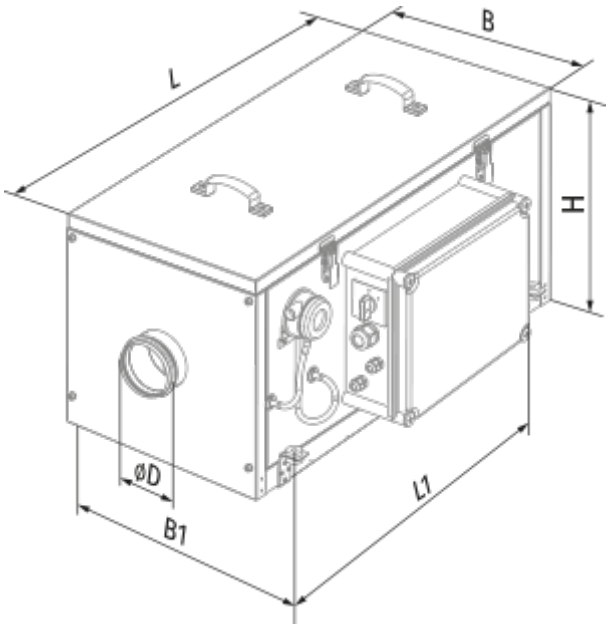

Accessories

For round ducts

Name	Photo	Description
SD 200/600		Silencers for round ducts
SD 200/900		Silencers for round ducts
SD 200/1200		Silencers for round ducts
SDF 200/600		Flexible silencers for round ducts
SDF 200/900		Flexible silencers for round ducts

SDF 200/2000		Flexible silencers for round ducts

For round ducts

Name	Photo	Description
VRV 200		Backdraft dampers with spring for round ducts

For round ducts

Name	Photo	Description
VKA 200		Air dampers for round ducts

For round ducts

Name	Photo	Description
EVA 200	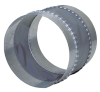	Flexible anti-vibration connectors for round ducts

Other accessories

Name	Photo	Description
FP 439x428x70 G4		G4 panel filter