

BLAUBOX E 1200-6 Pro

Supply ventilation units

- Power of electrical reheater: 6000
- Sound pressure level LpA at 3 m: 30
- Sound-insulated casing
- Reheater: Electric
- Control: Remote Control
- Casing material: Galvanized steel

	Unit of measurement	BLAUBOX E 1200-6 Pro
Connected air duct size	mm	315
Phases	-	3
Minimum supply voltage	V	400
Maximum supply voltage	V	400
Power supply frequency	Hz	50
Rated power	W	171
Power of electrical reheater	W	6000
Unit current	A	8.7
Maximum airflow	m³/h	1190
Rotation speed at 50hz	-	2600
Sound pressure level LpA at 3 m	dB(A)	30
Weight	kg	60
Transported air temperature (max)	°C	55
Transported air temperature (min)	°C	-25
Ambient air temperature max	°C	40
Ingress protection rating	-	IP22
Ambient air humidity max	%	80
Ingress protection rating of the drive	-	IP44

Dimensions

ØD	B	B1	H	L	L1
314	527	566.5	548	900	750

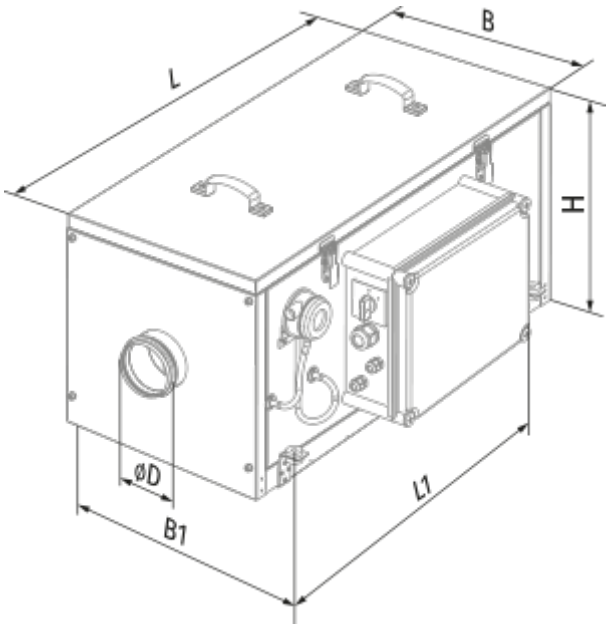

Accessories

For round ducts

Name	Photo	Description
SD 315/600		Silencers for round ducts
SD 315/900		Silencers for round ducts
SD 315/1200		Silencers for round ducts
SDF 315/600		Flexible silencers for round ducts
SDF 315/900		Flexible silencers for round ducts

SDF 315/2000		Flexible silencers for round ducts

For round ducts

Name	Photo	Description
VRV 315		Backdraft dampers with spring for round ducts

For round ducts

Name	Photo	Description
VKA 315		Air dampers for round ducts

For round ducts

Name	Photo	Description
EVA 315	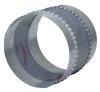	Flexible anti-vibration connectors for round ducts

Other accessories

Name	Photo	Description
FP 475x470x70 G4		G4 panel filter