

Belimo CM230

Electric actuators

	Unit of measurement	Belimo CM230
Phases	-	1
Minimum supply voltage	V	230
Maximum supply voltage	V	230
Power supply frequency	Hz	50/60
Rated power	W	1
Weight	kg	0.13
Ambient air temperature min	°C	-30
Ambient air temperature max	°C	50
Ingress protection rating	-	IP54

Dimensions

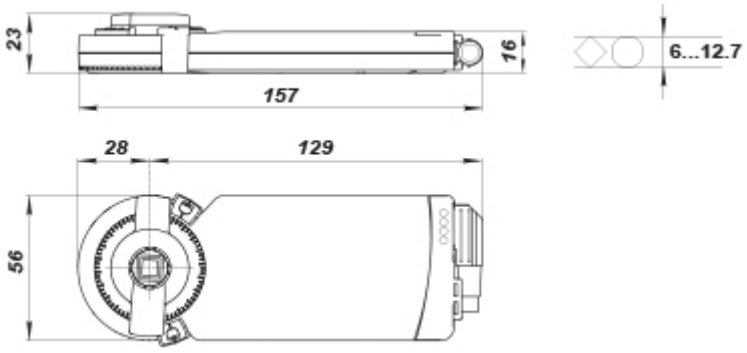
23
16
157
6...12.7
28
129
56