

Axis-QR 500 4D

Wall-mounted axial fans

- Sound pressure level LpA at 3 m: 60
- Impeller type: Axial
- Casing material: Coated steel
- Installation in any position

	Unit of measurement	Axis-QR 500 4D
Connected air duct size	mm	500
Phases	-	3
Minimum supply voltage	V	400
Maximum supply voltage	V	400
Power supply frequency	Hz	50
Rated power	W	450
Unit current	A	0.9
Maximum airflow	m³/h	6570
Rotation speed at 50hz	-	1300
Sound pressure level LpA at 3 m	dB(A)	60
Weight	kg	14
Transported air temperature (max)	°C	60
Transported air temperature (min)	°C	-30
Ingress protection rating	-	IP24
Ingress protection rating of the drive	-	IP54
Impeller material	-	Coated steel

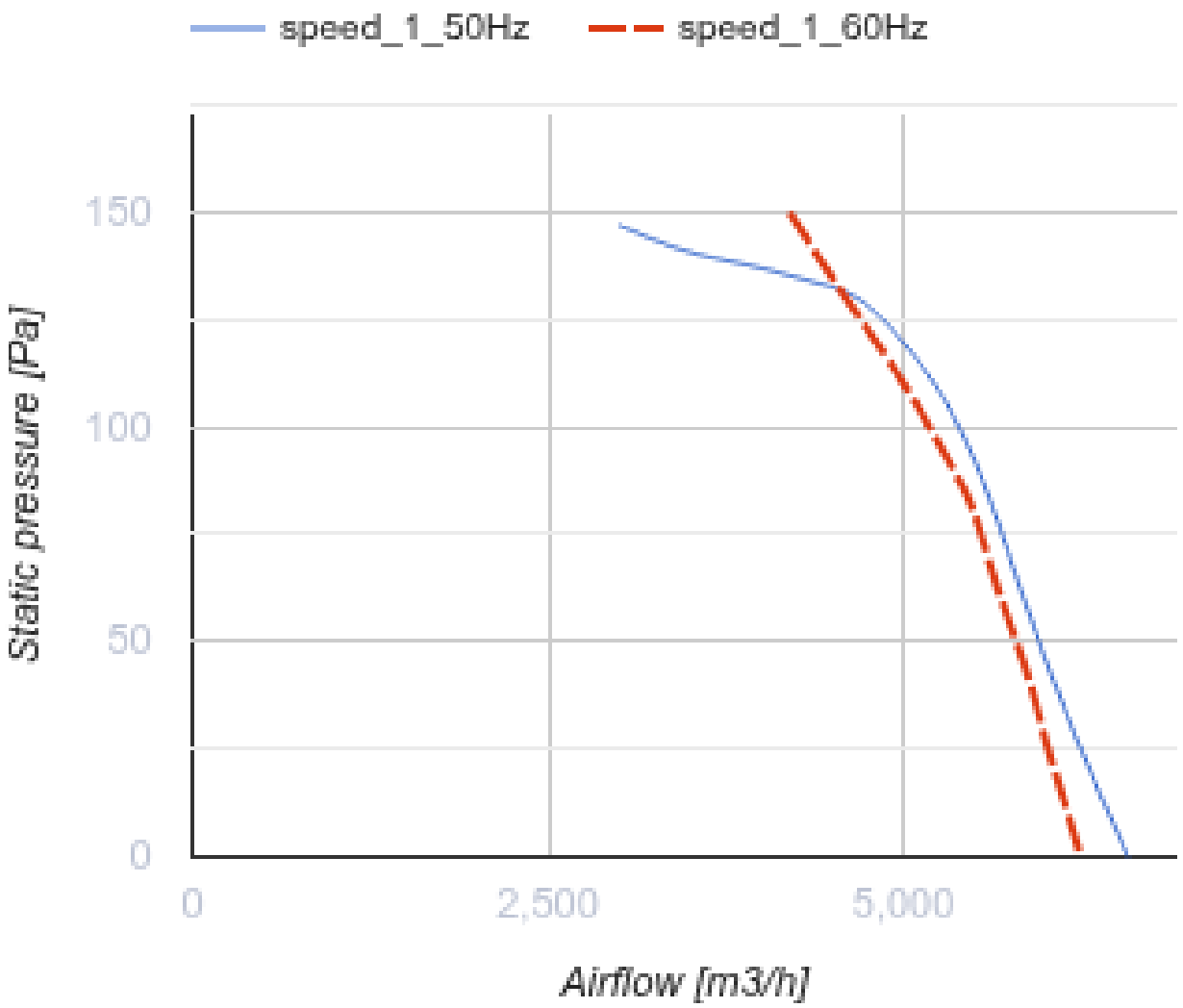
speed_1_50Hz
speed_1_60Hz
150
100
50
0
Static pressure [Pa]
0
2,500
5,000
Airflow [m3/h]

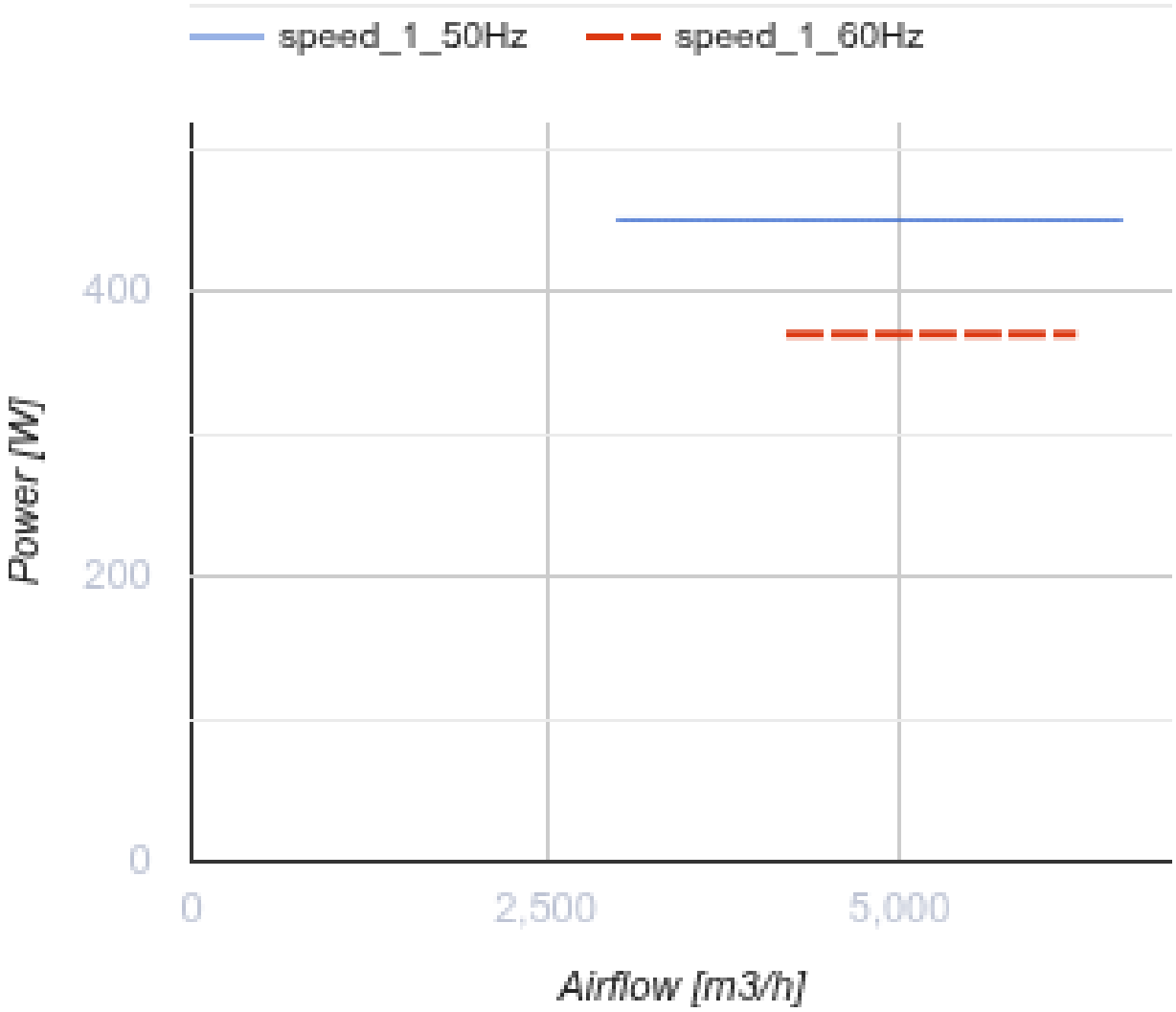

Dimensions

ØD	ØD1	ØD2	Ød	L
520	590	655	11	250

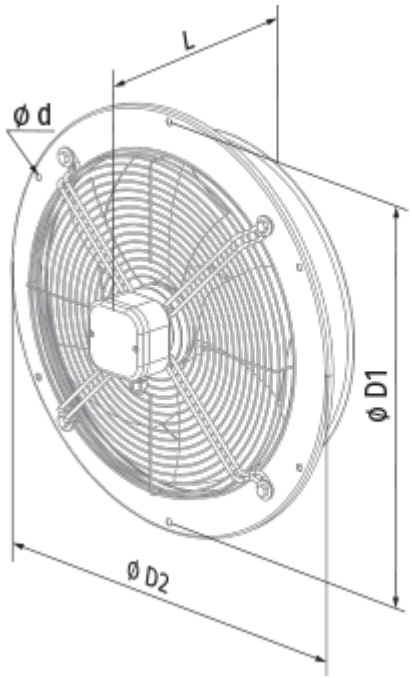
L
ø d
ø D1
ø D2

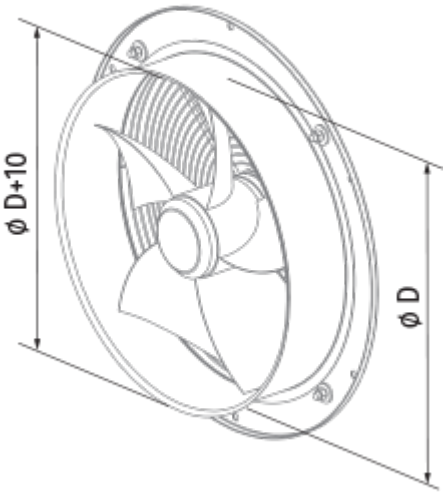
ø D+10
ø D

Ecodesign

Trademark	Blauberg
Model	Axis-QR 500 4D
Type of drive installed	External MSD or VSD
Type of heat recovery system	None
Nominal external pressure (Pa)	120
Maximum external leakage rates (%)	2.7
Static efficiency (%)	35.5
Declared typology	NRVU UVU
Sound power level (dB(A))	92
Effective electric power input (kW)	0.478