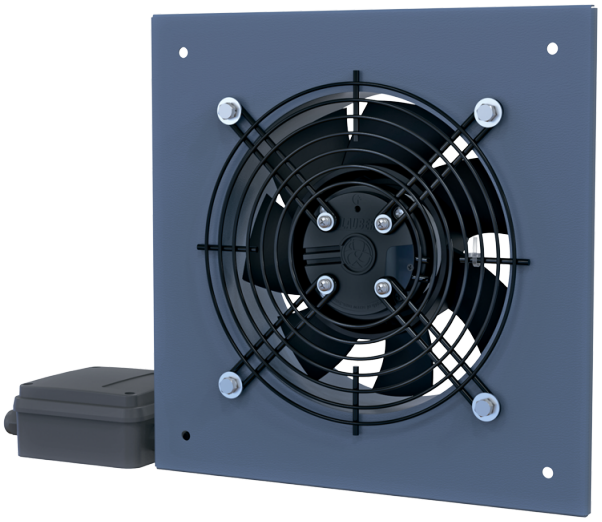

Axis-Q EC 200

Wall-mounted axial fans with EC-motors

- Sound pressure level LpA at 3 m: 50
- Impeller type: Axial
- Casing material: Coated steel

	Unit of measurement	Axis-Q EC 200
Connected air duct size	mm	200
Phases	-	1
Minimum supply voltage	V	230
Maximum supply voltage	V	230
Power supply frequency	Hz	50/60
Rated power	W	55
Unit current	A	0.4
Maximum airflow	m^3/h	975
Sound pressure level LpA at 3 m	dB(A)	50
Weight	kg	2.04
Transported air temperature (max)	°C	60
Transported air temperature (min)	°C	-25
Ingress protection rating	-	IPX5
Ingress protection rating of the drive	-	IP55
Impeller material	-	Coated steel

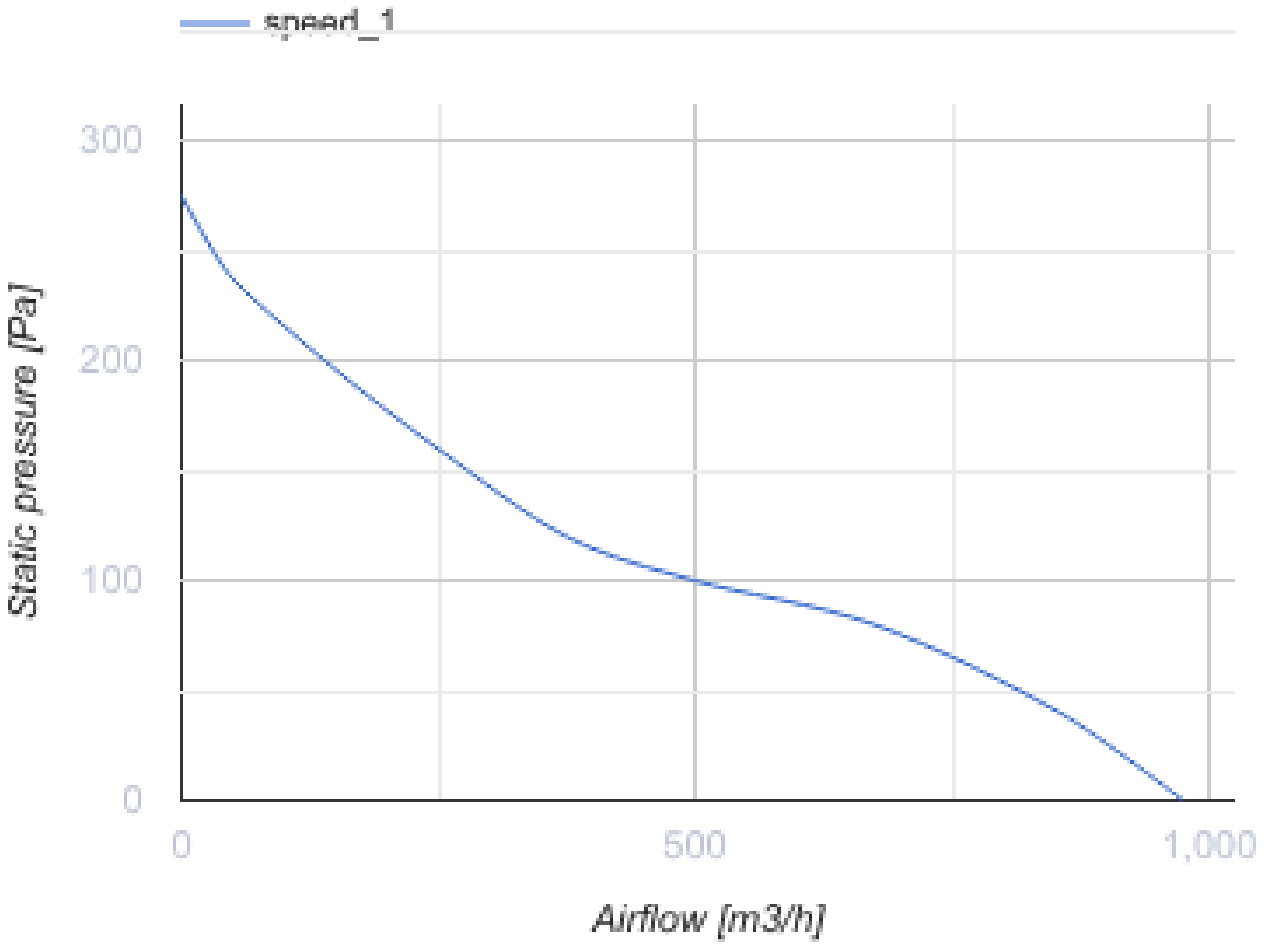

Dimensions

ØD	ØD1	Ød	L	L1	W	W1
210	260	7	81	93	312	260

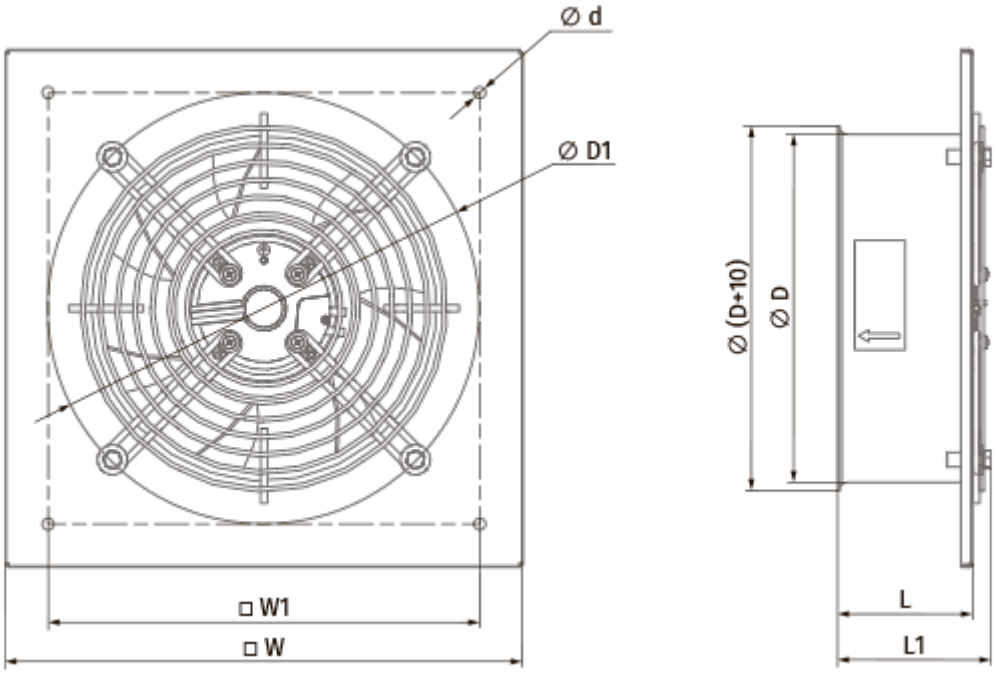
Ø d
Ø D1
□ W1
□ W
Ø (D+10)
Ø D
L
L1