

# Axis-F 630 6E

Axial inline fans

- Sound pressure level LpA at 3 m: 59
- Impeller type: Axial
- Casing material: Coated steel
- Installation in any position

| | Unit of measurement | Axis-F 630 6E |
|---|---|---|
| Connected air duct size | mm | 630 |
| Phases | - | 1 |
| Minimum supply voltage | V | 220 |
| Maximum supply voltage | V | 240 |
| Power supply frequency | Hz | 50 |
| Rated power | W | 540 |
| Unit current | A | 2.4 |
| Maximum airflow | $m^3/h$ | 10900 |
| Sound pressure level LpA at 3 m | dB(A) | 59 |
| Weight | kg | 16.4 |
| Transported air temperature (max) | °C | 60 |
| Transported air temperature (min) | °C | -30 |
| Ingress protection rating | - | IP24 |
| Ingress protection rating of the drive | - | IP54 |
| Impeller material | - | Coated steel |

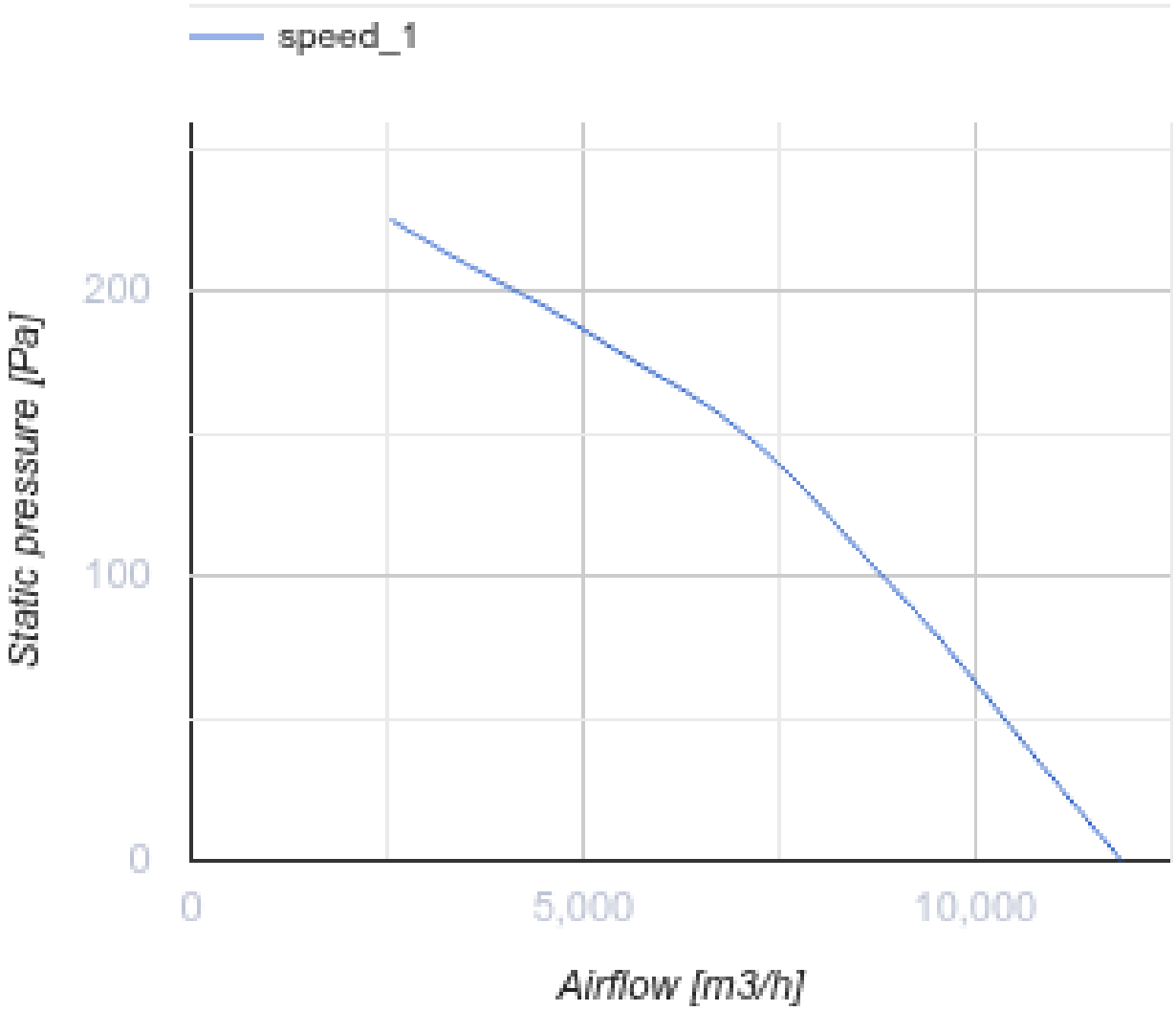
speed_1
Static pressure [Pa]
200
100
0
0
5,000
10,000
Airflow [m3/h]

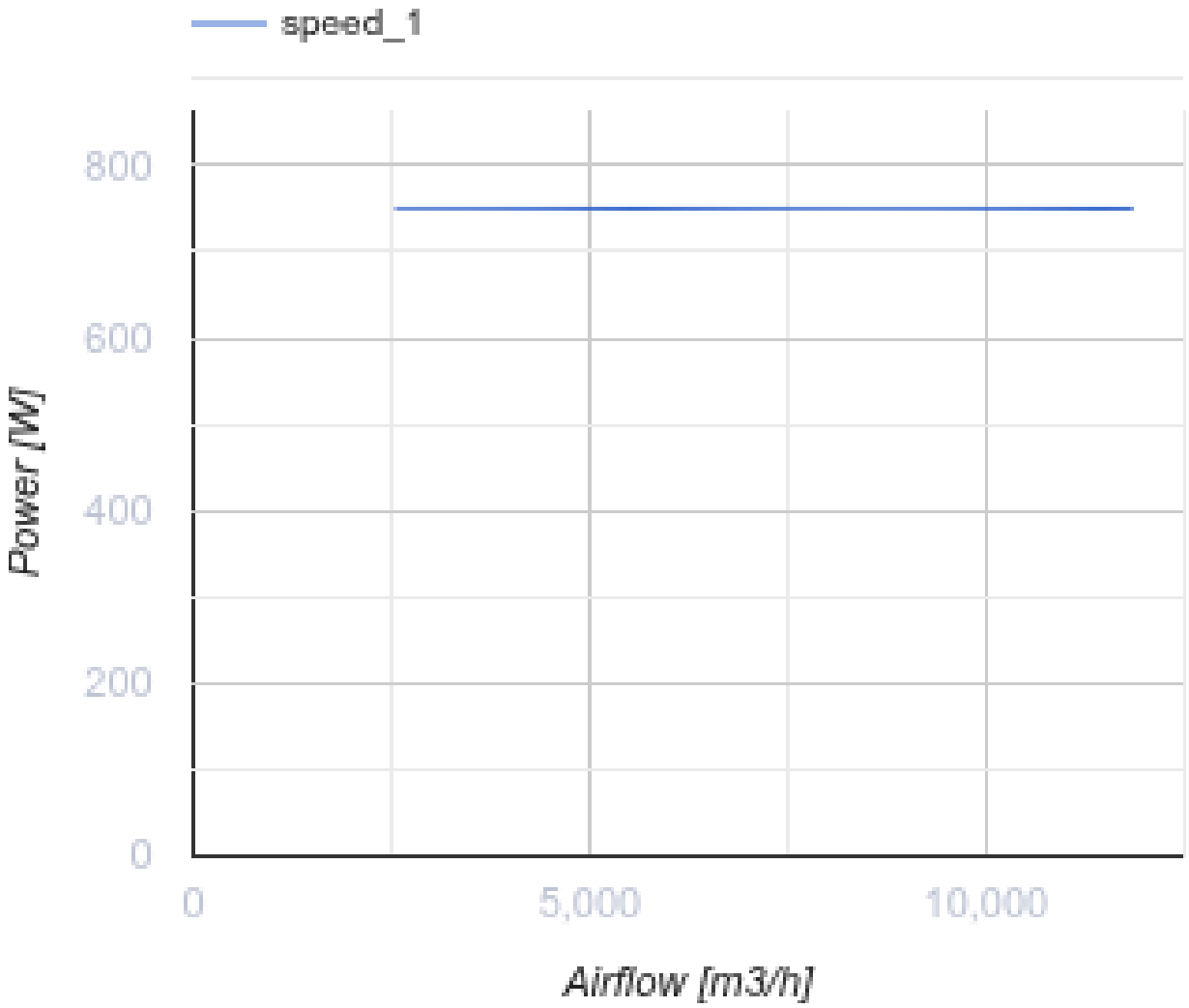


## Dimensions

| ØD | ØD1 | ØD2 | Ød | B | L |
|---|---|---|---|---|---|
| 645 | 674 | 715 | 11,5 | 740 | 250 |

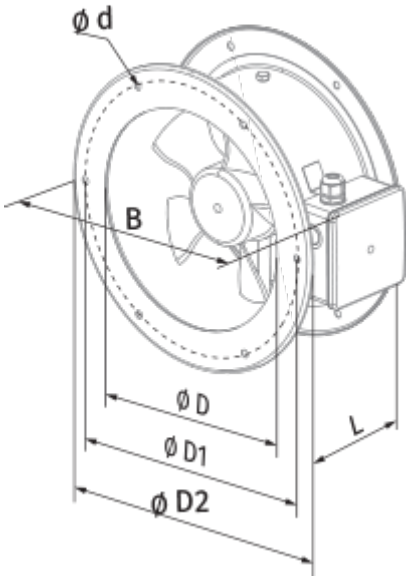
Ø d
B
Ø D
Ø D1
Ø D2
L

## Ecodesign

| | |
|---|---|
| Trademark | Blauberg |
| Model | Axis-F 630 6E |
| Type of drive installed | External MSD or VSD |
| Type of heat recovery system | None |
| Nominal external pressure (Pa) | 90 |
| Maximum external leakage rates (%) | 2.7 |
| Static efficiency (%) | 35 |
| Declared typology | NRVU UVU |
| Effective electric power input (kW) | 0.5 |
| Sound power level (dB(A)) | 92 |