

Axis-F 630 6D

Axial inline fans

- Sound pressure level LpA at 3 m: 72
- Impeller type: Axial
- Casing material: Coated steel
- Installation in any position

	Unit of measurement	Axis-F 630 6D
Connected air duct size	mm	630
Phases	-	3
Maximum supply voltage	V	400
Minimum supply voltage	V	400
Power supply frequency	Hz	50
Rated power	W	550
Unit current	A	1.45
Maximum airflow	m^3/h	10950
Sound pressure level LpA at 3 m	dB(A)	72
Weight	kg	16.4
Transported air temperature (max)	°C	60
Transported air temperature (min)	°C	-30
Ingress protection rating	-	IP24
Ingress protection rating of the drive	-	IP54
Impeller material	-	Coated steel

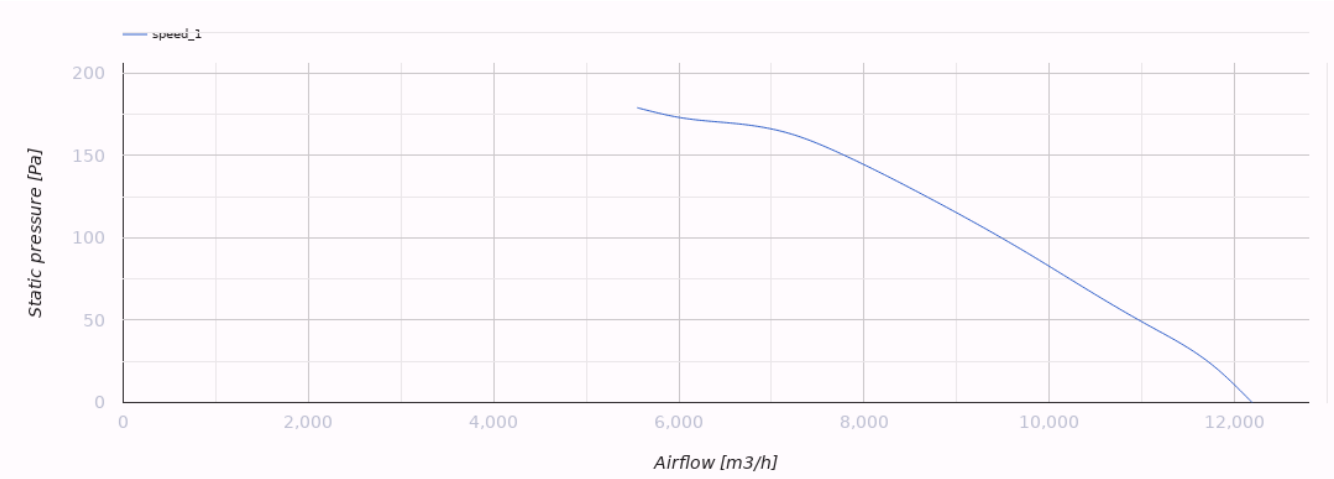

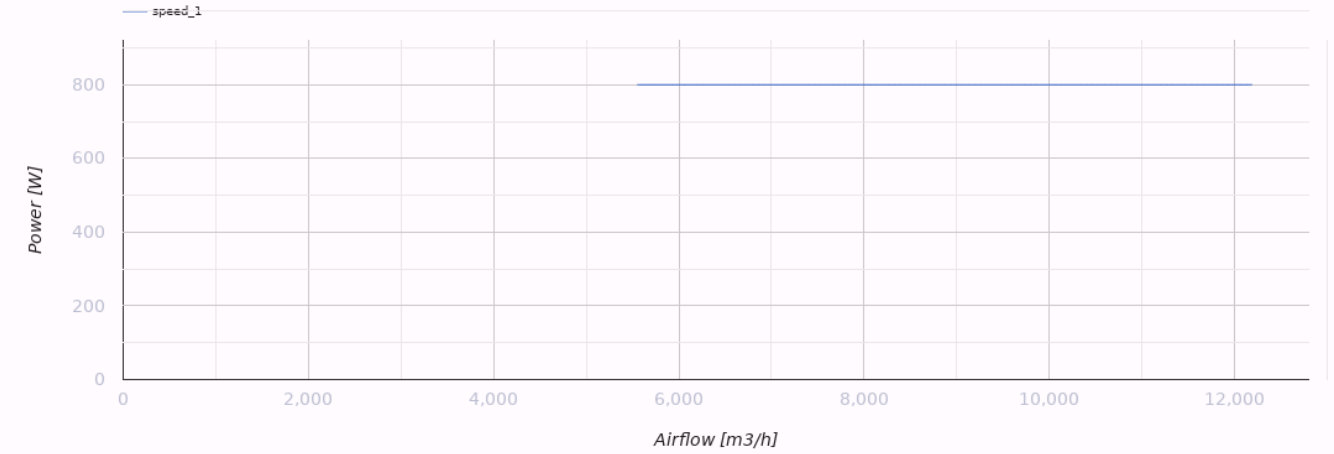

Dimensions

ØD	ØD1	ØD2	Ød	B	L
645	674	715	11,5	740	250

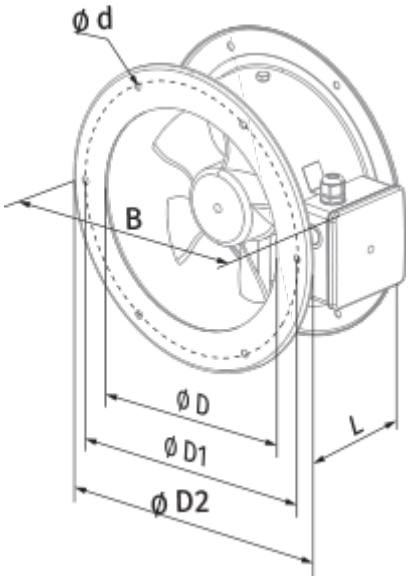
Ø d
B
Ø D
Ø D1
Ø D2
L