

Axis-F 450 6D

Axial inline fans

- Sound pressure level LpA at 3 m: 53
- Impeller type: Axial
- Casing material: Coated steel
- Installation in any position

	Unit of measurement	Axis-F 450 6D
Connected air duct size	mm	450
Phases	-	3
Minimum supply voltage	V	400
Maximum supply voltage	V	400
Power supply frequency	Hz	50
Rated power	W	148
Unit current	A	0.42
Maximum airflow	m^3/h	3500
Sound pressure level LpA at 3 m	dB(A)	53
Weight	kg	9.1
Transported air temperature (max)	°C	60
Transported air temperature (min)	°C	-30
Ingress protection rating	-	IP24
Ingress protection rating of the drive	-	IP54
Impeller material	-	Coated steel

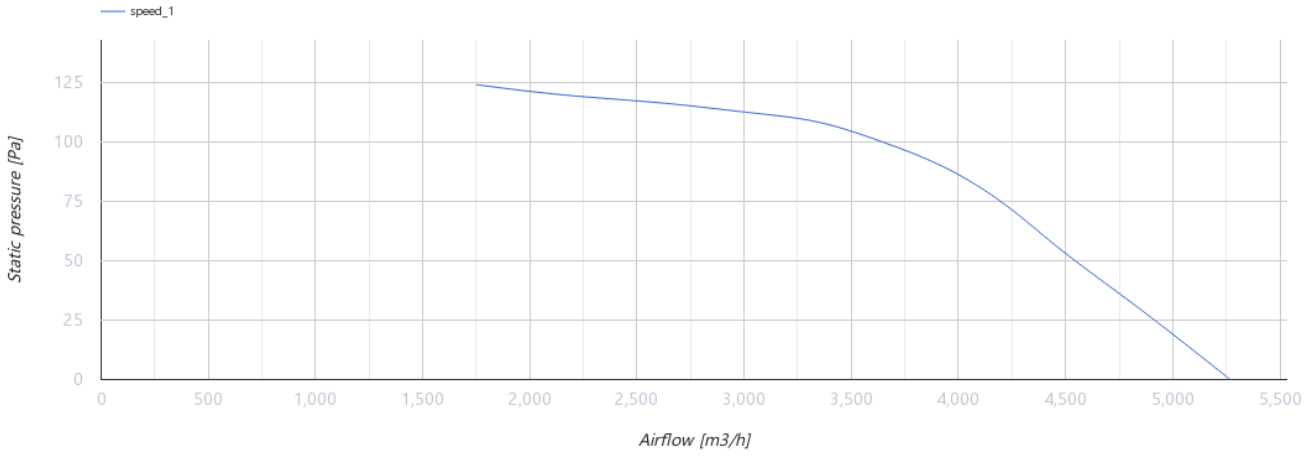

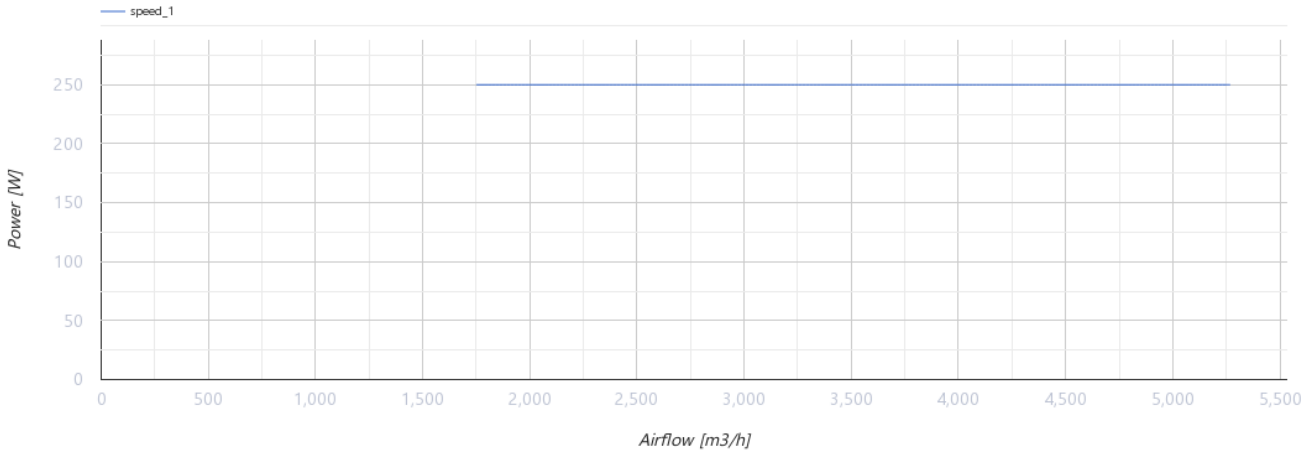

Dimensions

ØD	ØD1	ØD2	Ød	B	L
462	487	515	9,5	550	200

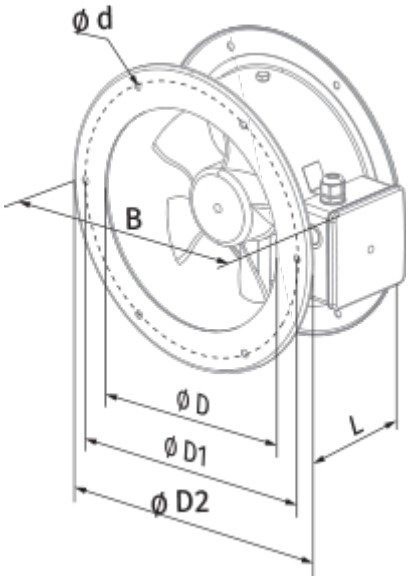
Ø d
B
Ø D
Ø D1
Ø D2
L

Ecodesign

Trademark	Blauberg
Model	Axis-F 450 6D
Type of drive installed	External MSD or VSD
Type of heat recovery system	None
Nominal external pressure (Pa)	100
Maximum external leakage rates (%)	2.7
Static efficiency (%)	35
Declared typology	NRVU UVU
Effective electric power input (kW)	0.296
Sound power level (dB(A))	85