

Axis-F 200 2E

Axial inline fans

- Sound pressure level LpA at 3 m: 48
- Impeller type: Axial
- Casing material: Coated steel
- Installation in any position

	Unit of measurement	Axis-F 200 2E	
Connected air duct size	mm	200	
Phases	-	1	
Minimum supply voltage	V	220	
Maximum supply voltage	V	240	
Power supply frequency	Hz	50	60
Rated power	W	55	
Unit current	A	0.26	
Maximum airflow	m^3/h	860	
Rotation speed at 50hz	-	2300	
Sound pressure level LpA at 3 m	dB(A)	48	
Weight	kg	3	
Transported air temperature (max)	°C	60	
Transported air temperature (min)	°C	-30	
Ingress protection rating	-	IP24	
Ingress protection rating of the drive	-	IP44	
Impeller material	-	Coated steel	

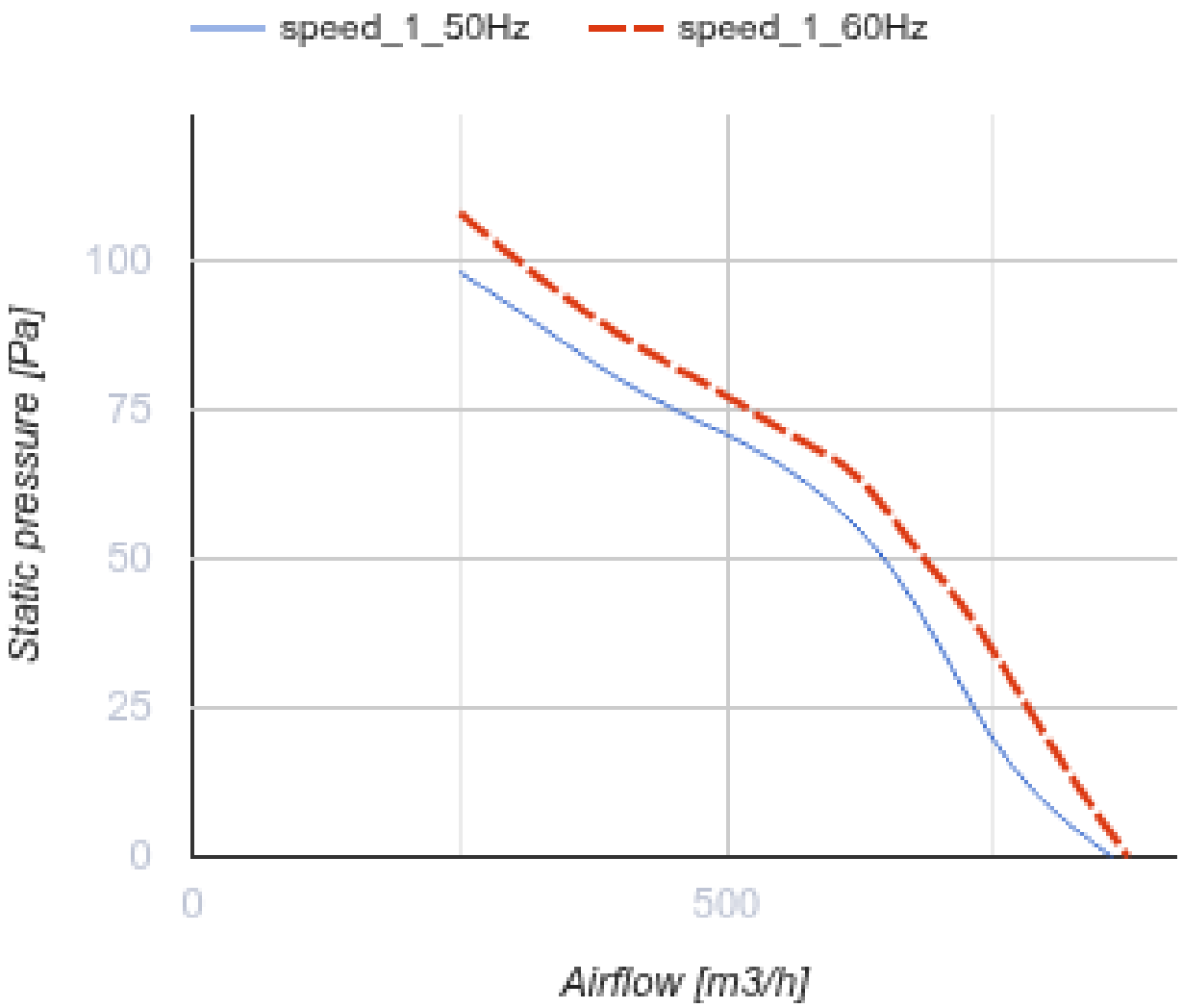
speed_1_50Hz
speed_1_60Hz
Static pressure [Pa]
100
75
50
25
0
0
500
Airflow [m3/h]

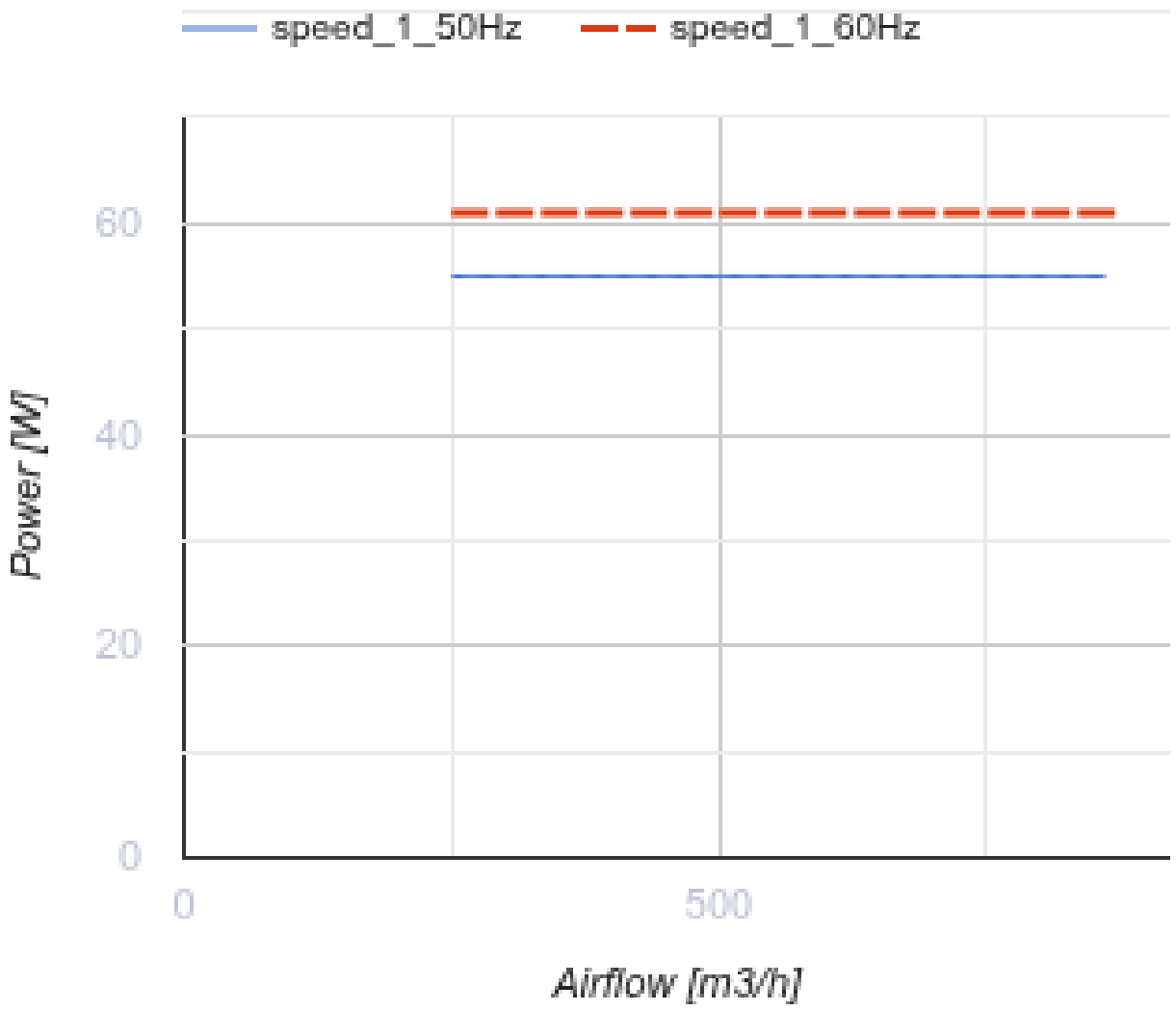

Dimensions

ØD	ØD1	ØD2	Ød	B	L
205	235	255	7,0	290	120

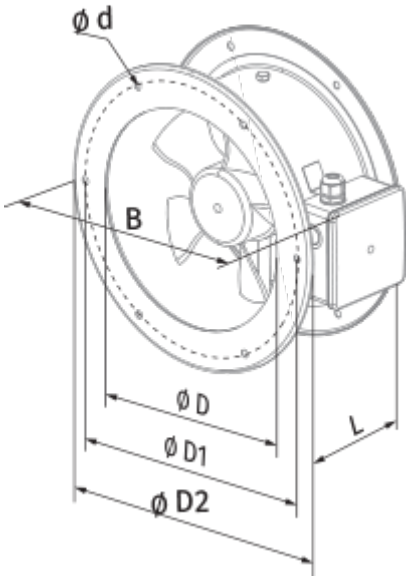
Ø d
B
Ø D
Ø D1
Ø D2
L

Ecodesign

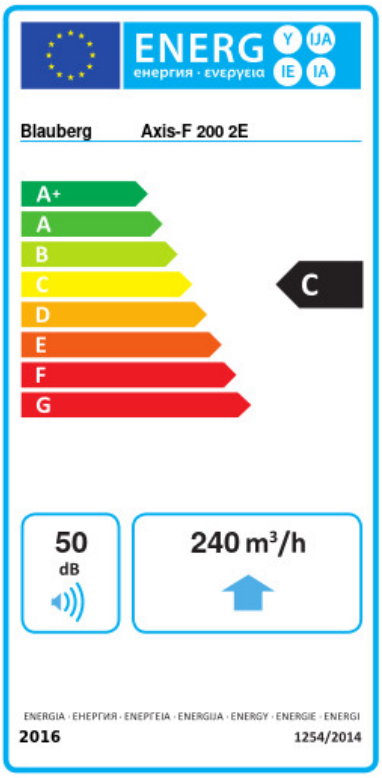

Trademark	Blauberg					
Model	Axis-F 200 2E					
Specific energy consumption (SEC) (kWh/(m²/a))	Cold		Average		Warm	
	-53	A+	-25.9	C	-10.4	E
Type of ventilation unit	Unidirectional					
Type of drive installed	Variable speed					
Type of heat recovery system	None					
Maximum flow rate (m³/h)	240					
Electric power input (W)	55					
Reference flow rate (m³/s)	0.047					
Reference pressure difference (Pa)	50					
Specific power input (SPI) (W/(m³/h))	0.18					
Control typology	Local demand control					
Maximum external leakage rates (%)	2.7					
Declared typology	RVU UVU					
Sound power level (dB(A))	50					
The annual electricity consumption (AEC) (kWh/a)	Cold		Average		Warm	
	95		95		95	
The annual heating saved (AHS) (kWh/a)	Cold		Average		Warm	
	5536		2830		1280	