

AirOne E2 ERV BLK

Single-room HRV with HRV or ERV counter-flow recovery and app control. Cold-climate versions add integrated heaters plus mechanical supply and gravity exhaust dampers

- Power of electrical preheater: 200
- Power of electrical reheater: 200
- Sound pressure level LpA at 3 m: 27
- Sound pressure level LpA at 1 m: 37
- Heat exchanger type: Counter flow
- Heat exchanger material: Enthalpy
- Enthalpy heat exchanger
- Reheater: Electric
- Preheater: Electric
- Casing material: ABS Plastic
- Shutters
- Heater

	Unit of measurement	AirOne E2 ERV BLK		
Speed	-	1	2	3
Connected air duct size	mm	250		
Minimum supply voltage	V	220		
Maximum supply voltage	V	240		
Power supply frequency	Hz	50/60		
Power of electrical preheater	W	200		
Power of electrical reheater	W	200		
Unit current	A	0.3		
Maximum airflow	m³/h	30	60	90
Maximum airflow (Boost mode)	m³/h	150		
Sound pressure level LpA at 3 m	dB(A)	12	21	27
Sound pressure level LpA at 1 m	dB(A)	23	31	37
Heat recovery efficiency, max	%	85		
Heat exchanger type	-	Counter flow		
Heat exchanger material	-	Enthalpy		
Weight	kg	11		
Transported air temperature (max)	°C	40		
Transported air temperature (min)	°C	-20		
Minimum wall thickness	mm	300		
Maximum wall thickness	mm	800		

Energy efficiency class	-	A

Dimensions

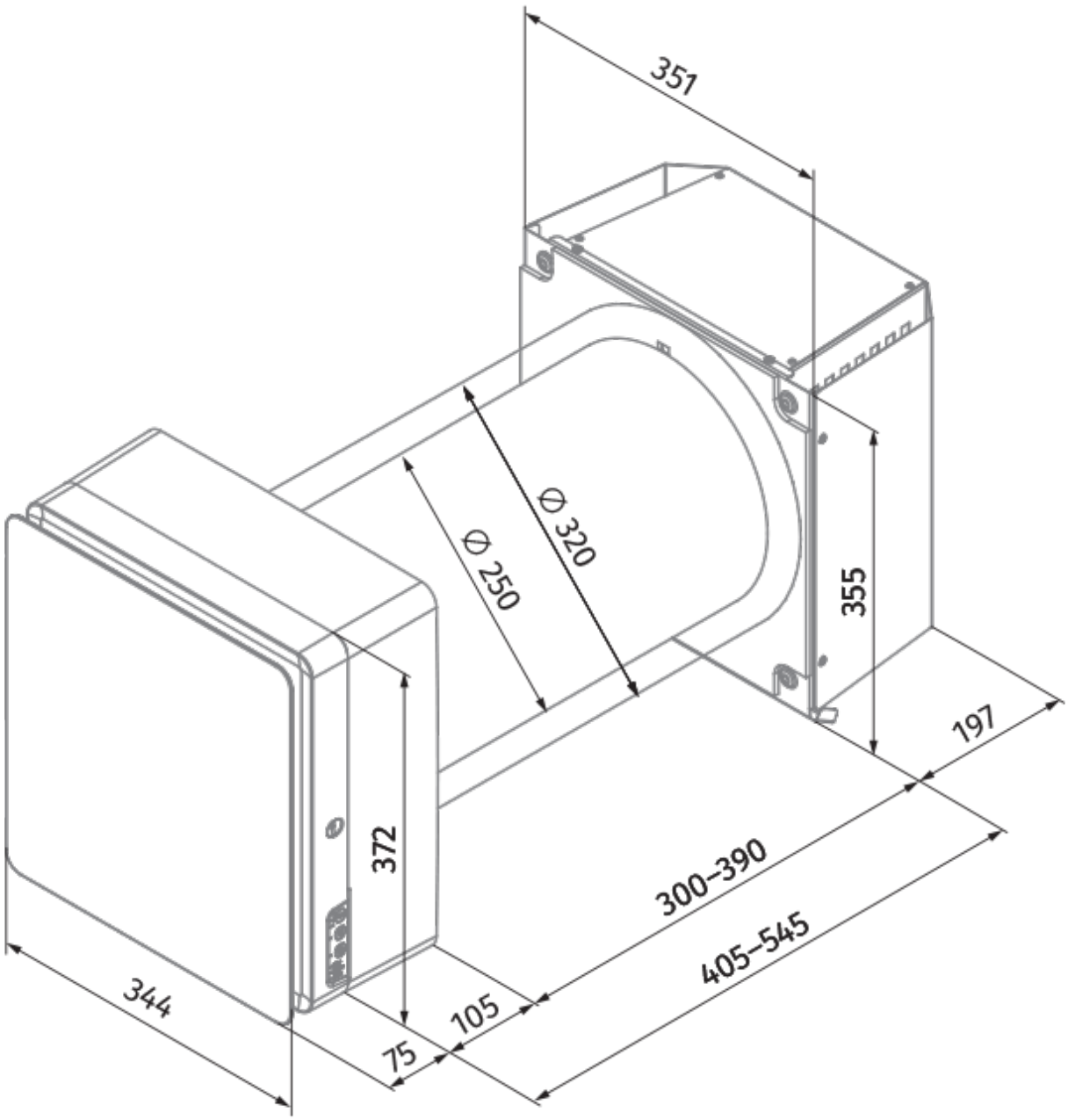

Mounting into walls 300–545 mm thick

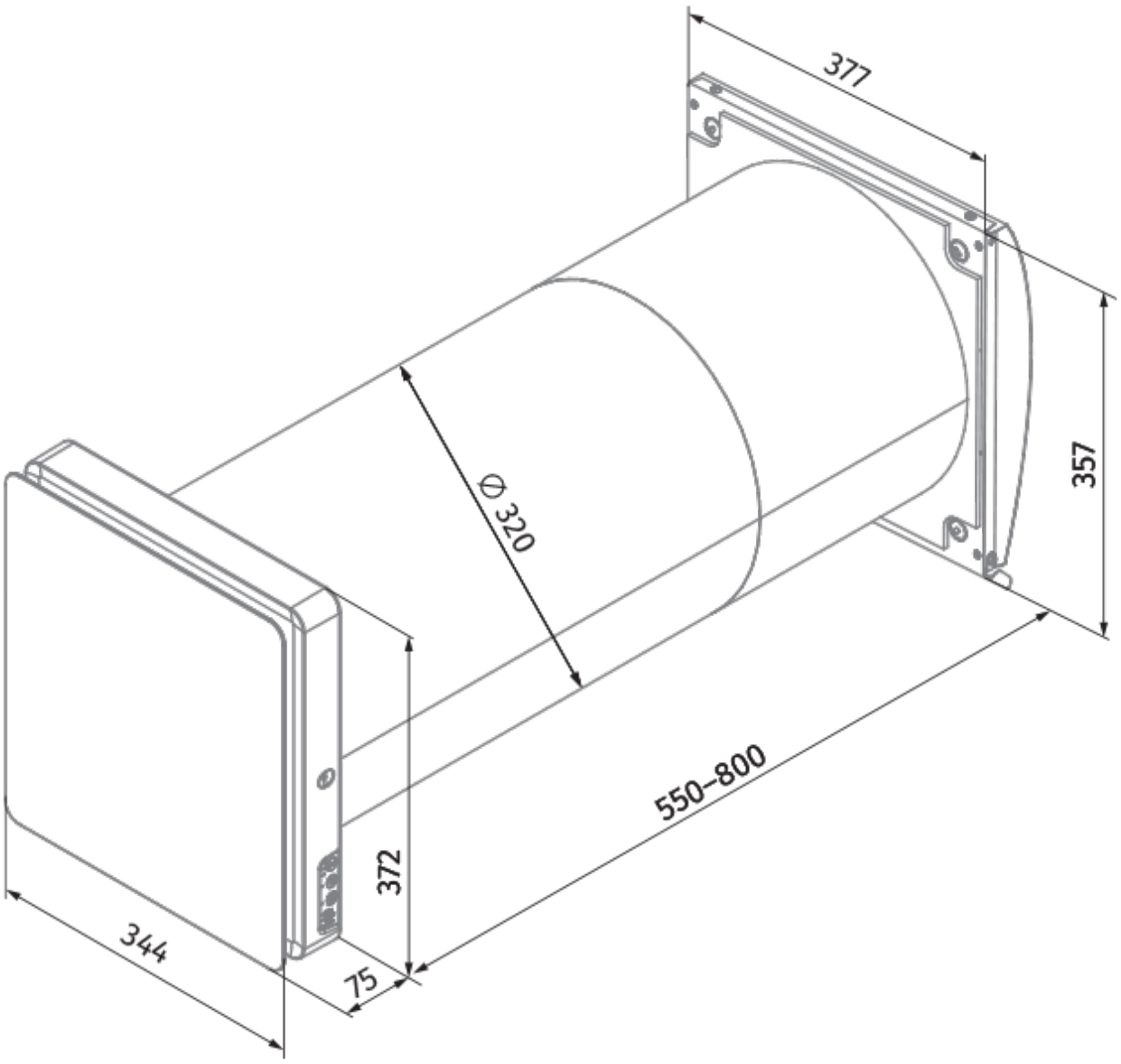

Mounting into walls 550–800 mm thick