

AH-S AirWall chrome 250

External metal wall hood for thin walls

- Casing material: Stainless steel

	Unit of measurement	AH-S AirWall chrome 250
Connected air duct size	mm	250

Dimensions

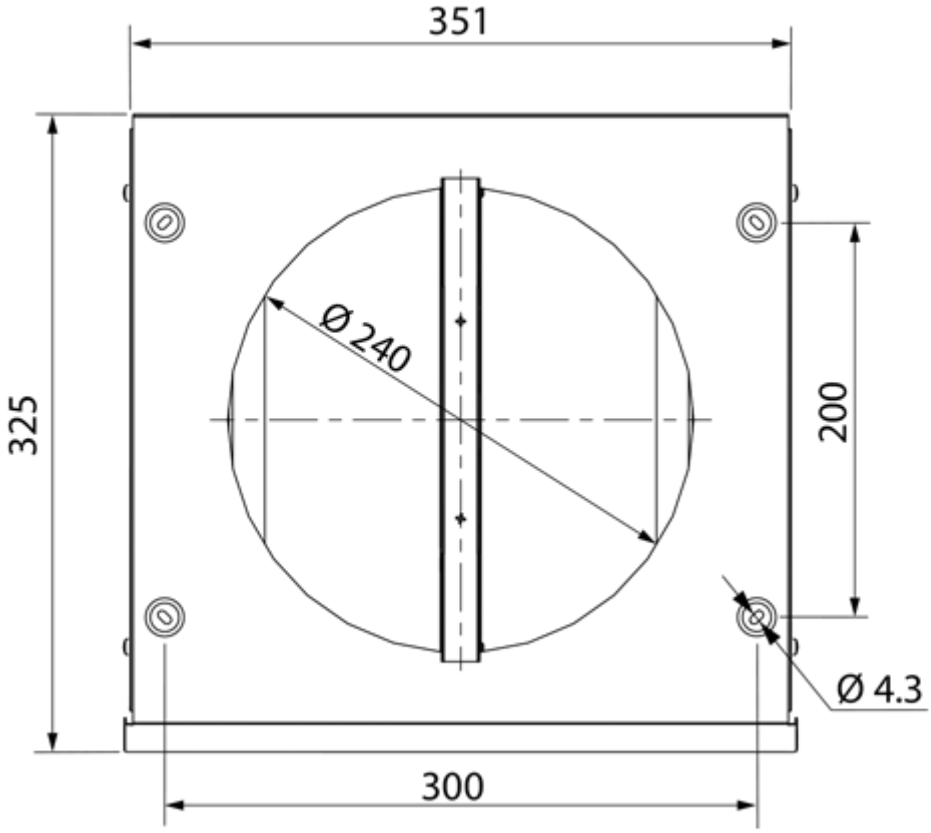
351
325
Ø 240
200
Ø 4.3
300

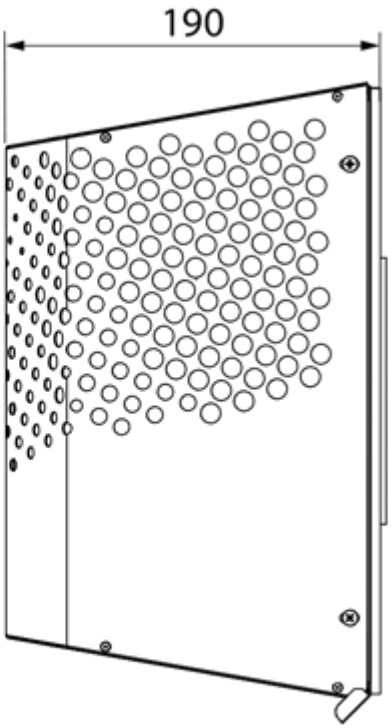
190