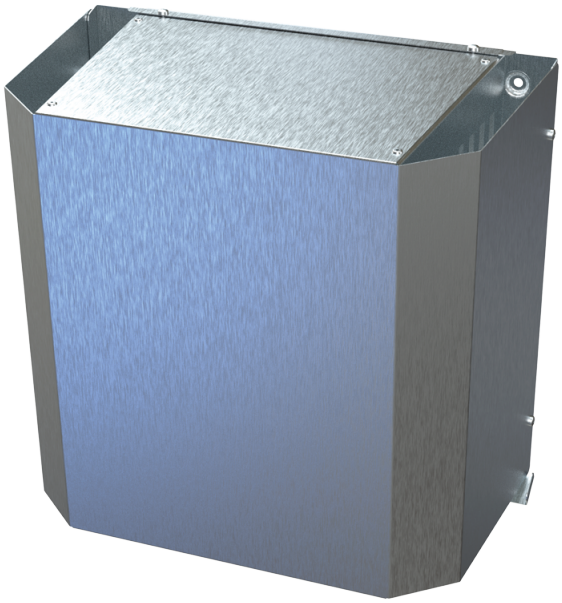

AH-S AirOne chrome 250

External metal wall hood for thin walls

- Casing material: Aluminium

	Unit of measurement	AH-S AirOne chrome 250
Connected air duct size	mm	250

Dimensions

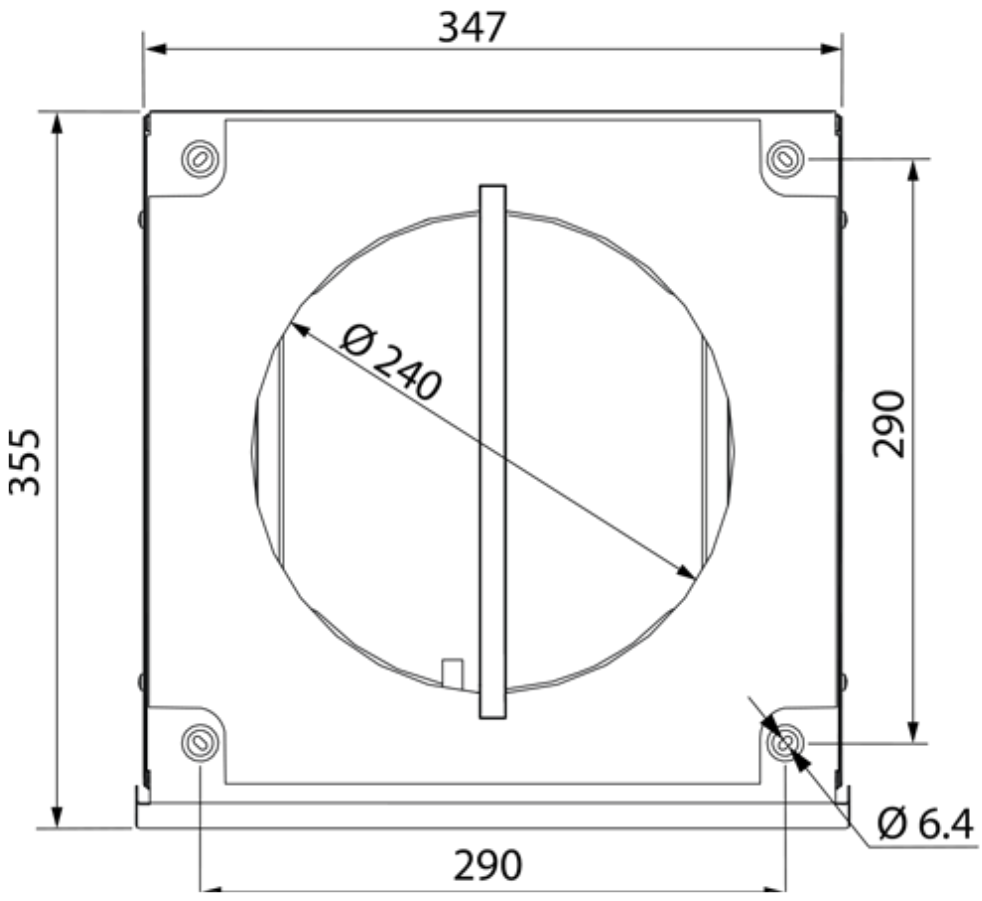
347
355
Ø 240
290
290
Ø 6.4

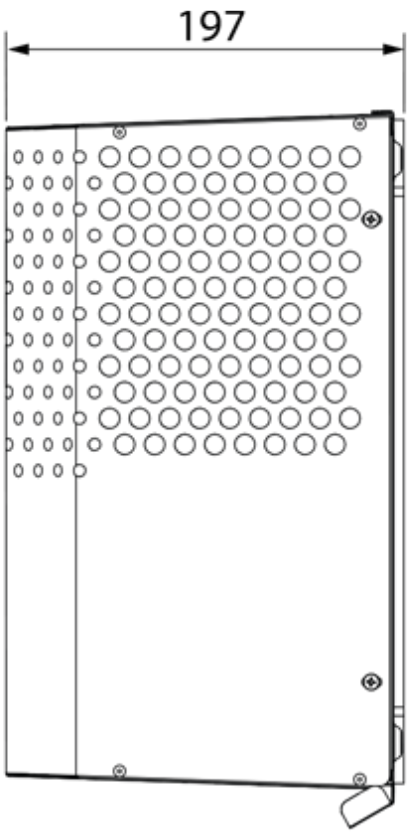
197