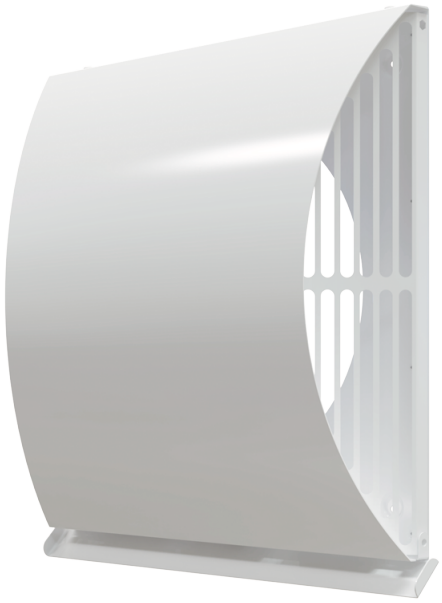

AH AirWall white 250

Flat external metal wall hood

- Casing material: Aluminium

	Unit of measurement	AH AirWall white 250
Connected air duct size	mm	250

Dimensions

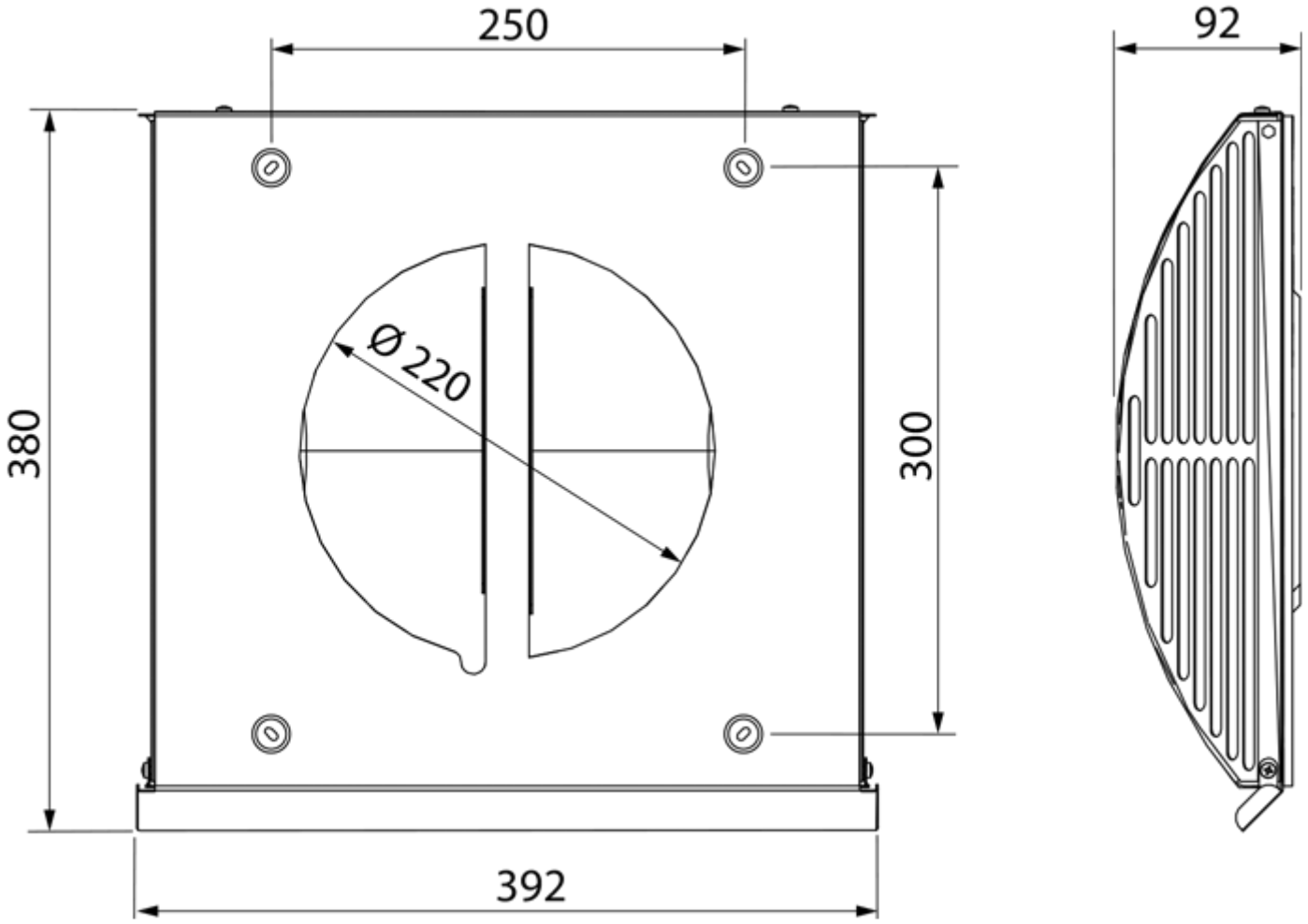
250
92
380
300
Ø 220
392