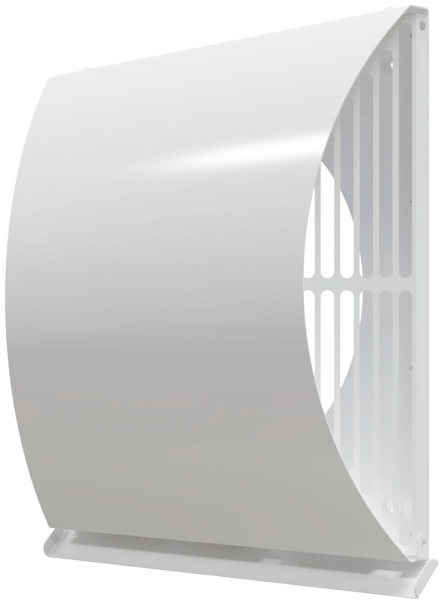

AH AirOne white 250

Flat external metal wall hood

- Casing material: Aluminium

	Unit of measurement	AH AirOne white 250
Connected air duct size	mm	250

Dimensions

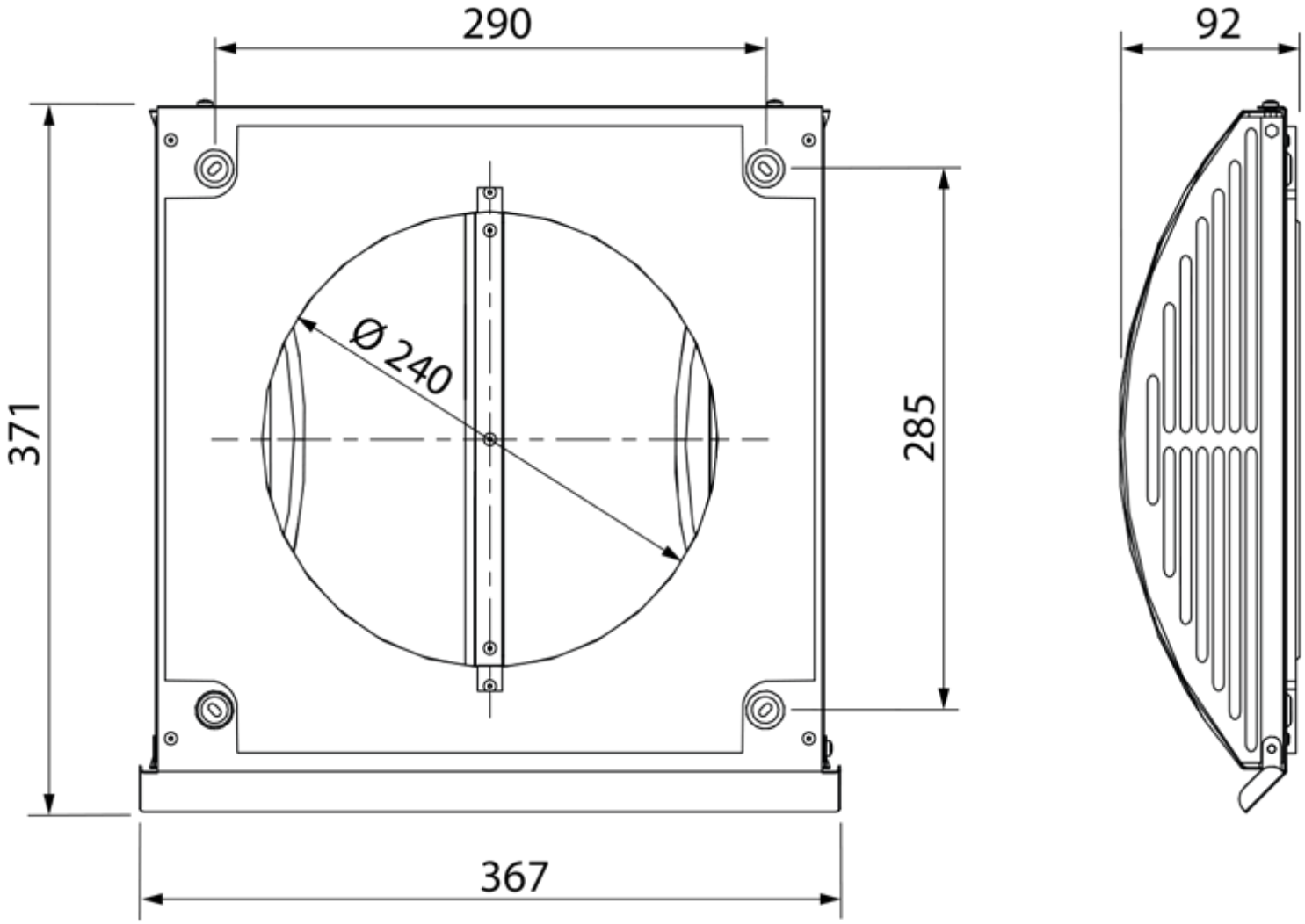
290
92
371
285
Ø 240
367