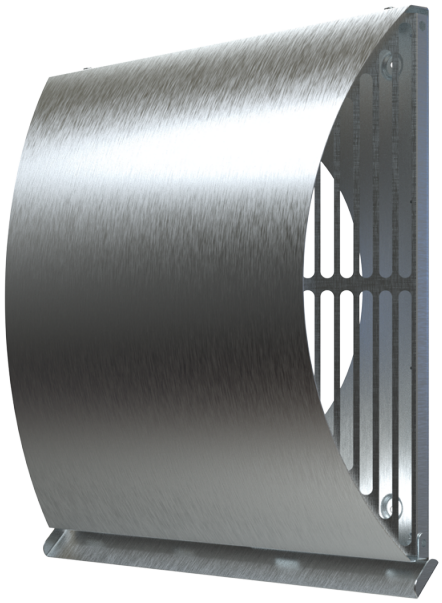

AH AirOne chrome 250

Flat external metal wall hood

- Casing material: Stainless steel

	Unit of measurement	AH AirOne chrome 250
Connected air duct size	mm	250

Dimensions

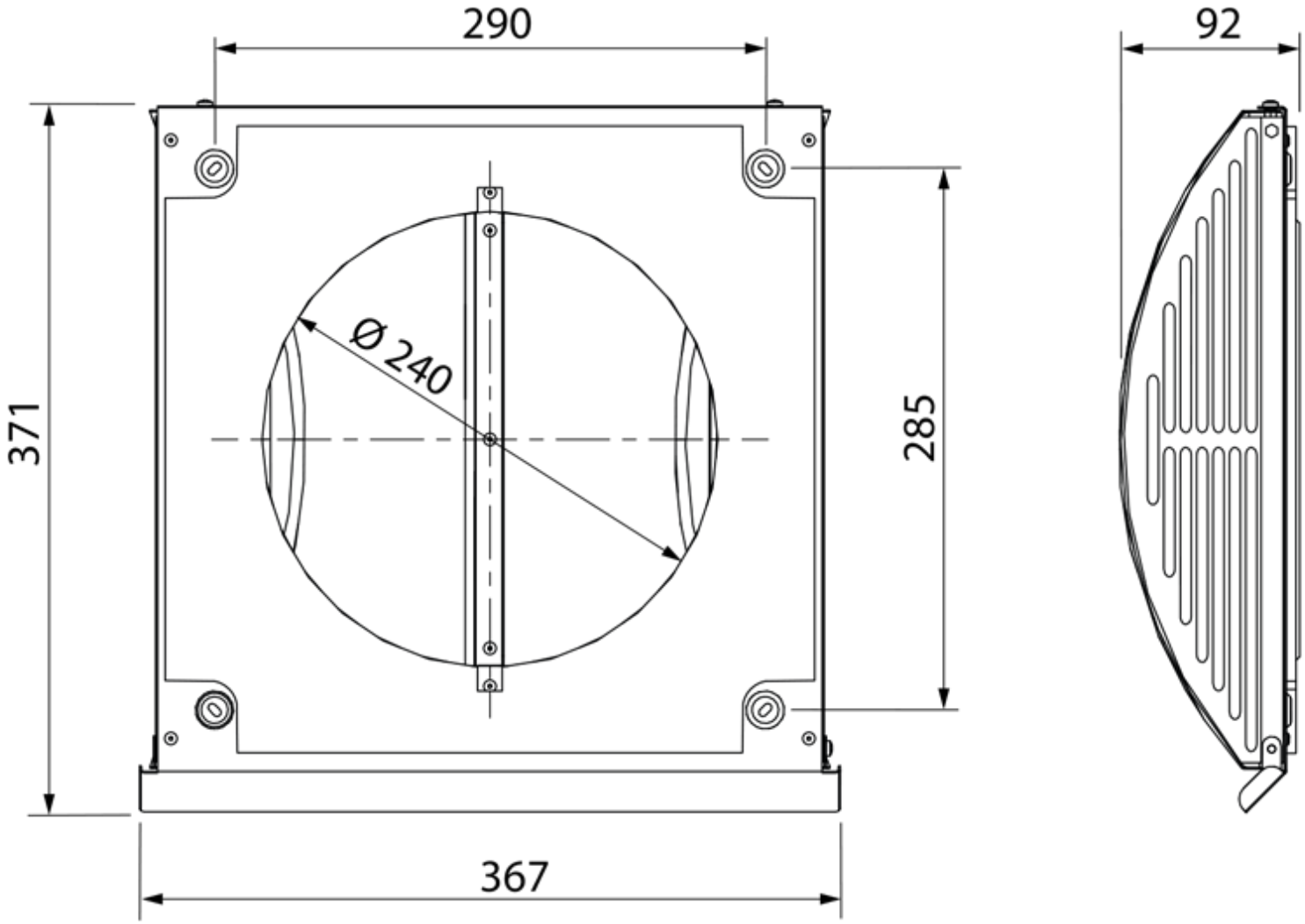
290
92
371
285
Ø 240
367