

AH-11 white 160

Plastic hoods decoration of supply and exhaust vents of public, residential and industrial ventilation systems

- Casing material: PVC

	Unit of measurement	AH-11 white 160
Connected air duct size	mm	160

Dimensions

Ø D1	A	A1	B	H	H1
164	212	160	60	260	160

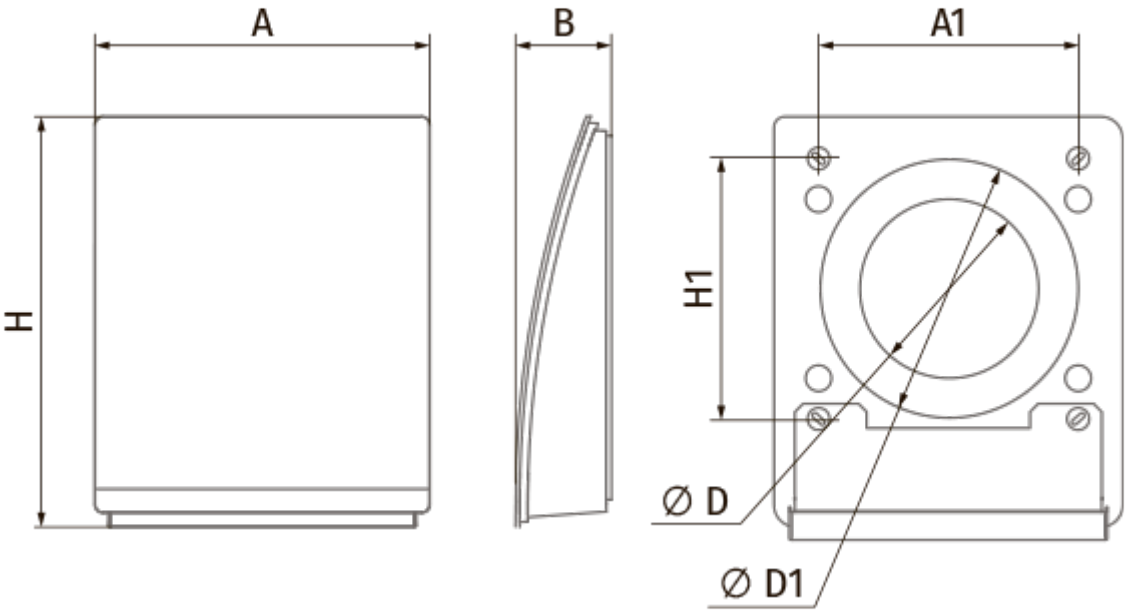
A
B
A1
H
H1
Ø D
Ø D1