

AH-11 grey 100

Plastic hoods decoration of supply and exhaust vents of public, residential and industrial ventilation systems

• Casing material: PVC plastic

	Unit of measurement	AH-11 grey 100
Connected air duct size	mm	100

Dimensions

Ø D	Ø D1	A	A1	B	H	H1
100	164	212	160	60	260	160

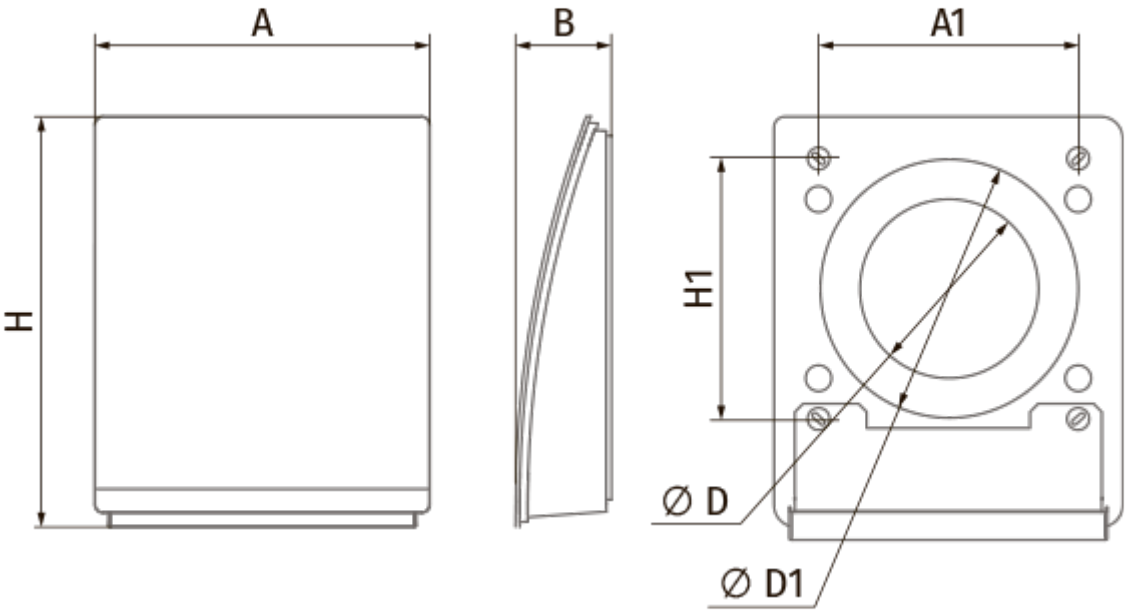
A
B
A1
H
H1
Ø D
Ø D1