

AH-10 beige 160

Plastic hoods decoration of supply and exhaust vents of public, residential and industrial ventilation systems

- Casing material: PVC

	Unit of measurement	AH-10 beige 160
Connected air duct size	mm	160

Dimensions

B	H	L	D
220	230.5	54	160

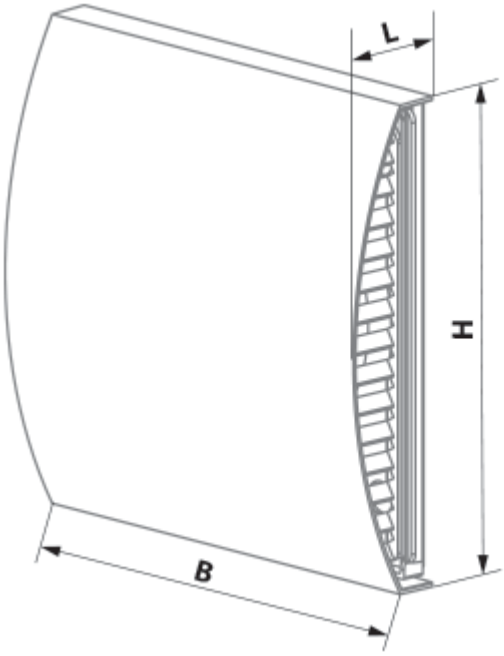
L
H
B

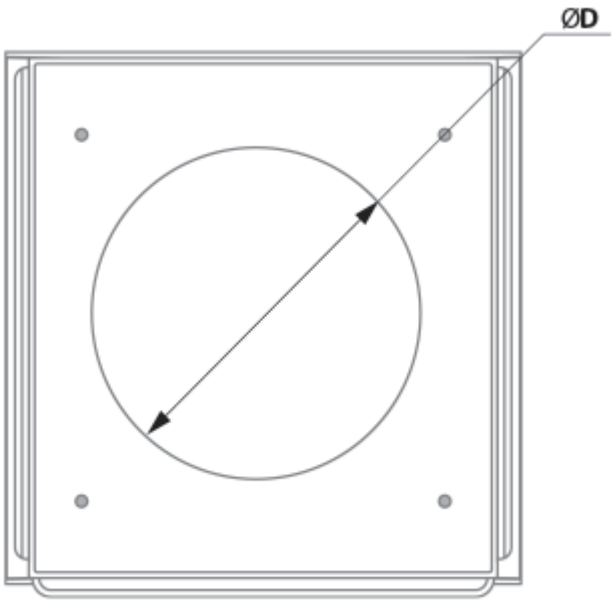
ØD