

Aero Still Chrome 150

Extract fan for low-noise applications

- Sound pressure level LpA at 3 m: 33
- Backdraft protection: Backdraft damper

	Unit of measurement	Aero Still Chrome 150
Connected air duct size	mm	150
Minimum supply voltage	V	220
Maximum supply voltage	V	240
Power supply frequency	Hz	50
Unit current	A	0.14
Maximum airflow	m³/h	254
Sound pressure level LpA at 3 m	dB(A)	33
Ingress protection rating	-	IP34
Impeller material	-	Plastic

Dimensions

a	b	c	Ø d	e
198	170	119	150	30

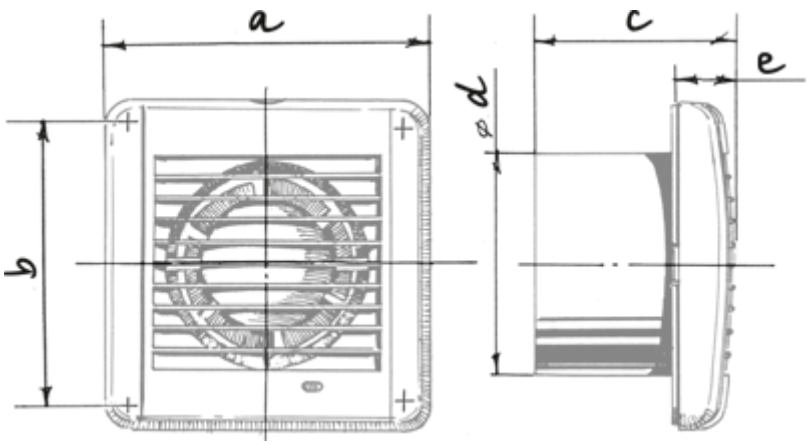
a
b
c
e
d
ø