

Aero Still Chrome 125 ST

Extract fan for low-noise applications

- Sound pressure level LpA at 3 m: 31
- Casing material: Plastic
- Backdraft protection: Backdraft damper
- Pull cord
- Timer: Turn off timer

	Unit of measurement	Aero Still Chrome 125 ST
Connected air duct size	mm	125
Minimum supply voltage	V	220
Maximum supply voltage	V	240
Power supply frequency	Hz	50
Rated power	W	9.4
Unit current	A	0.059
Maximum airflow	m³/h	158
Sound pressure level LpA at 3 m	dB(A)	31
Ambient air temperature min	°C	1
Ambient air temperature max	°C	40
Ingress protection rating	-	IP34
Impeller material	-	Plastic

Dimensions

a	b	c	Ø d	e
168	144	97	125	30

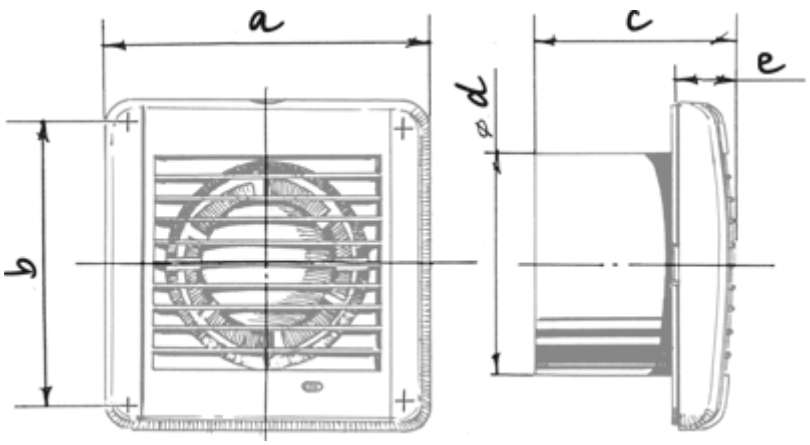
a
b
c
e
d
ø