


# Aero Still Chrome 100

Extract fan for low-noise applications

- Sound pressure level LpA at 3 m: 25
- Backdraft protection: Backdraft damper

| | Unit of measurement | Aero Still Chrome 100 |
|---|---|---|
| Connected air duct size | mm | 100 |
| Minimum supply voltage | V | 220 |
| Maximum supply voltage | V | 240 |
| Power supply frequency | Hz | 50 |
| Unit current | A | 0.035 |
| Maximum airflow | m³/h | 84 |
| Sound pressure level LpA at 3 m | dB(A) | 25 |
| Ingress protection rating | - | IP34 |
| Impeller material | - | Plastic |

## Dimensions

| a | b | c | Ø d | e |
|---|---|---|---|---|
| 144 | 122 | 92.5 | 100 | 29.5 |

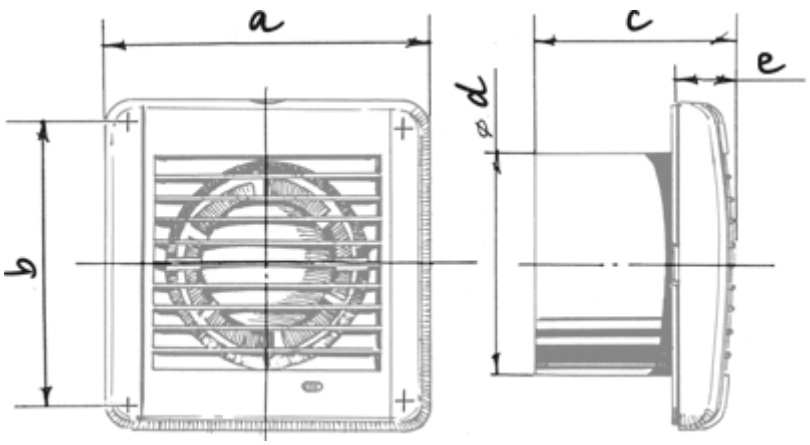
a
b
c
e
d
ø