

AH-11 terracotta 160

Plastic hoods decoration of supply and exhaust vents of public, residential and industrial ventilation systems

- Material de la carcasa: Plástico PVC

	Unidad de medida	AH-11 terracotta 160
Dimensiones del conducto de aire conectado	mm	160

Dimensiones

Ø D1	A	A1	B	H	H1
164	212	160	60	260	160

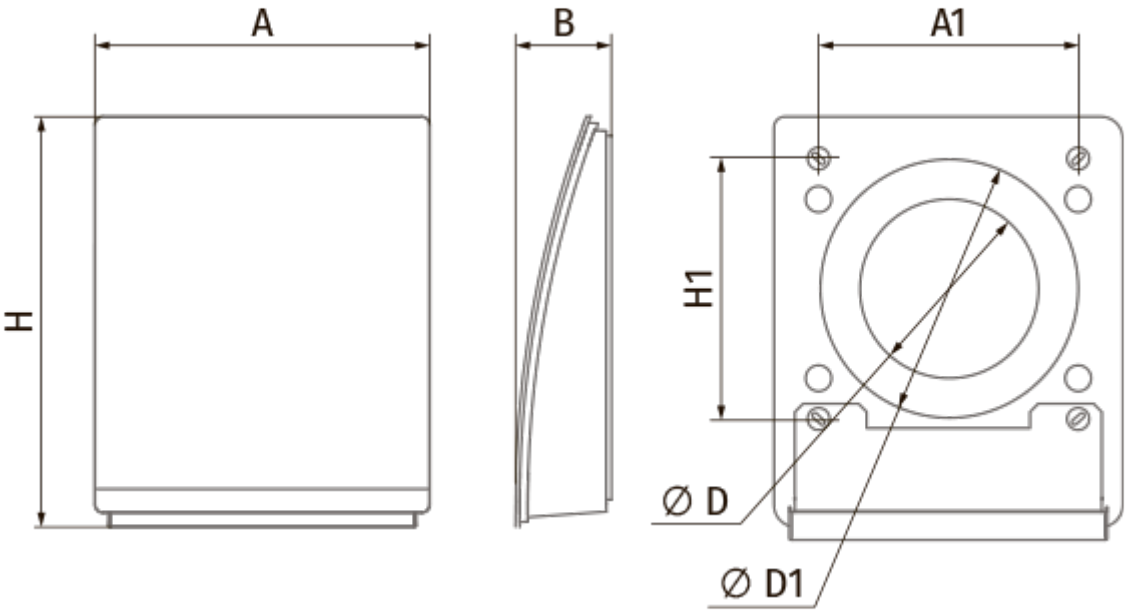
A
B
A1
H
H1
Ø D
Ø D1