

AH-11 anthracite grey 100

Plastic hoods decoration of supply and exhaust vents of public, residential and industrial ventilation systems

- Material de la carcasa: PVC

	Unidad de medida	AH-11 anthracite grey 100
Dimensiones del conducto de aire conectado	mm	100

Dimensiones

Ø D	Ø D1	A	A1	B	H	H1
100	164	212	160	60	260	160

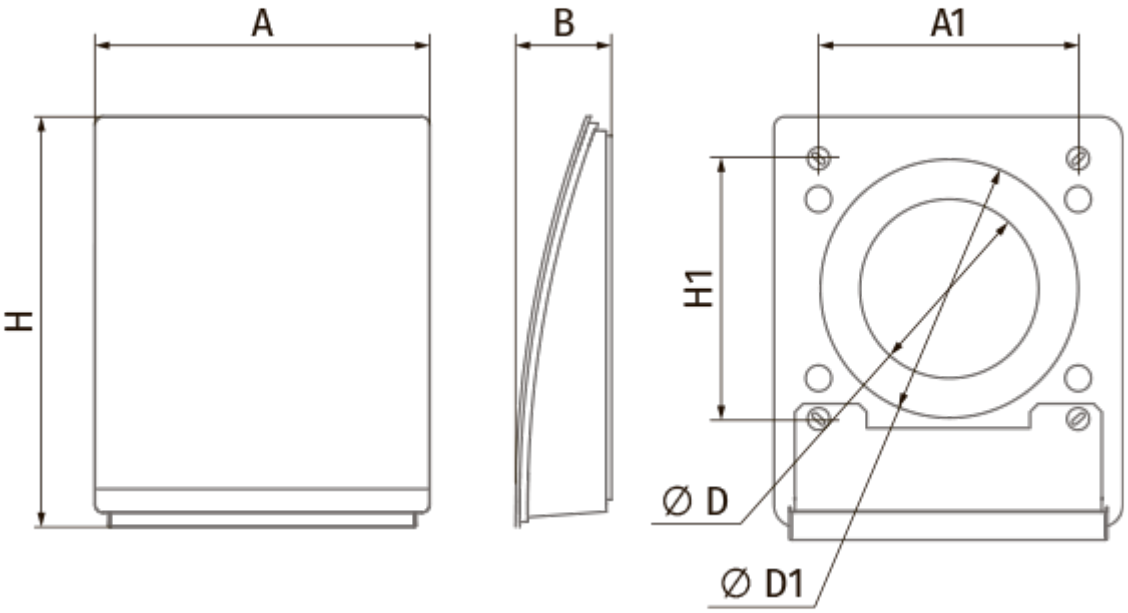
A
B
A1
H
H1
Ø D
Ø D1