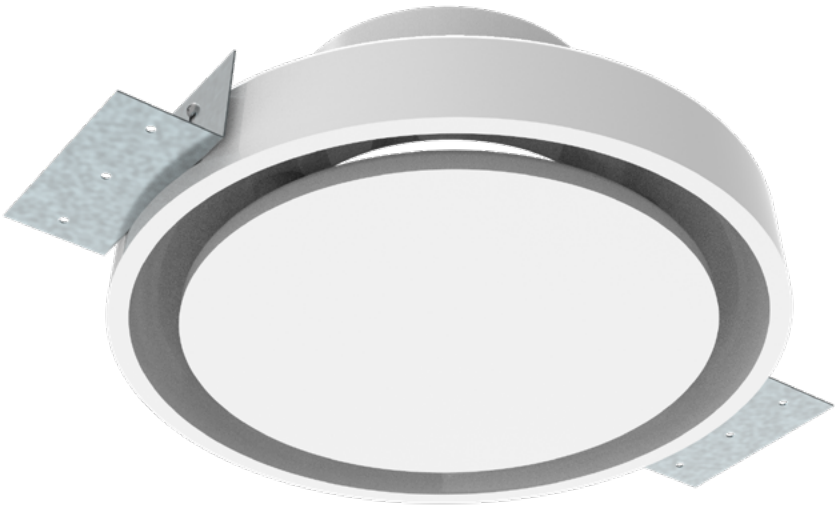

CEILING DIFFUSER

DPCH

EN INSTALLATION INSTRUCTION

BLAUBERG

PURPOSE

Ceiling diffusers are used in supply and extract ventilation systems, for heating and air conditioning in industrial, commercial and domestic premises.

DELIVERY SET

Diffuser - 1 pc.; Template - 1 pc.; Installation instruction - 1 pc.; Packing box - 1 pc.; Glass cloth - 1 pc.

DESIGNATION KEY

DPCH MFC 125

Spigot diameter [mm]

Design features:

_ : plastic flange
MFC: metal flange with an F-shaped cuff
MUC: metal flange with a U-shaped cuff

Series

OVERALL AND CONNECTING DIMENSIONS [mm]

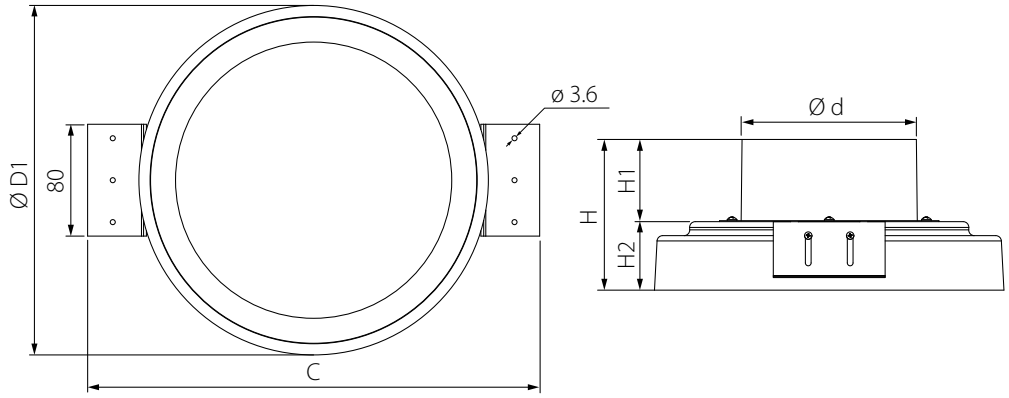

	d	D1	C	H	H1	H2
DPCH 125	125	250	323	108	58	39
DPCH MFC/MUC 125				98	49	
DPCH 150	150	300	374	119	60	49
DPCH MFC/MUC 150				129	70	
DPCH MFC/MUC 160	160					

DESIGN

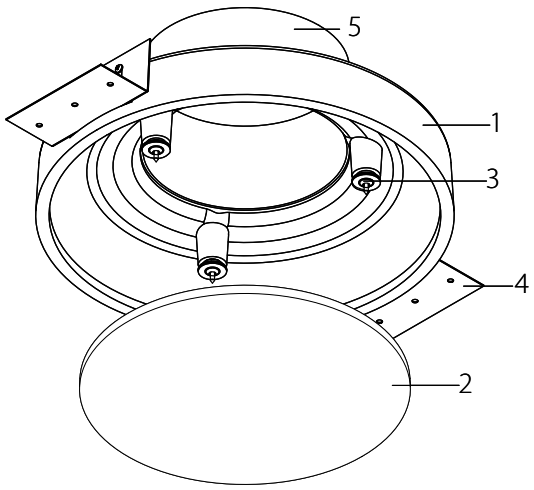

1 — casing
2 — front panel
3 — magnet holder
4 — mounting bracket
5 — flange

ATTENTION! When making a layout draft for the ventilation system, ensure a minimum distance (B) exists between the diffuser's flange to the ceiling elements.

	B
DPCH 125	100
DPCH MFC/MUC 125	
DPCH 150	127
DPCH MFC/MUC 150	
DPCH MFC/MUC 160	

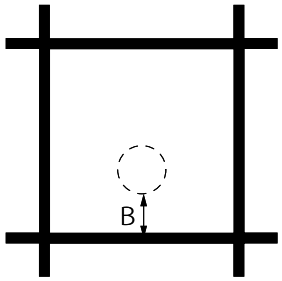

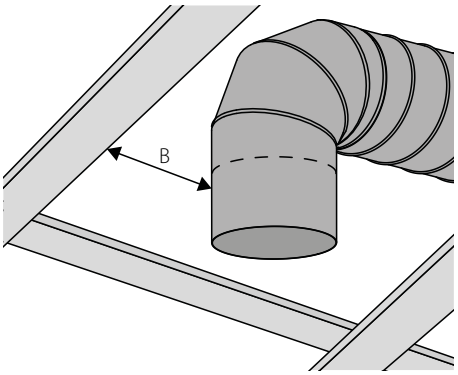

ATTENTION! To prevent vibration, a section of flexible duct must be attached in between the diffuser and rigid duct.

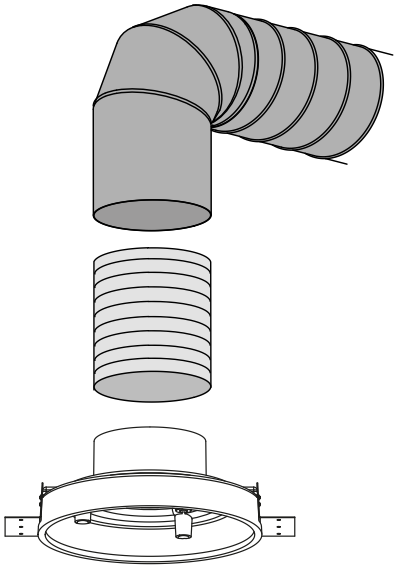

To attach the mounting brackets to drywall, use screws at least 3.9 mm in diameter.
Before starting the installation, secure the mounting brackets in pre-made holes on the diffuser's casing.
Adjust the position of the mounting brackets based on the ceiling thickness (A).

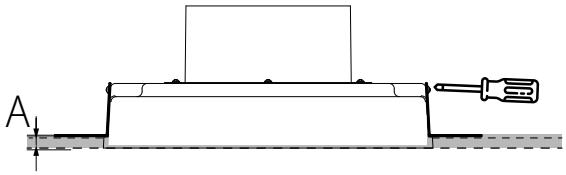

Remove the front panel fixed with magnet holders.

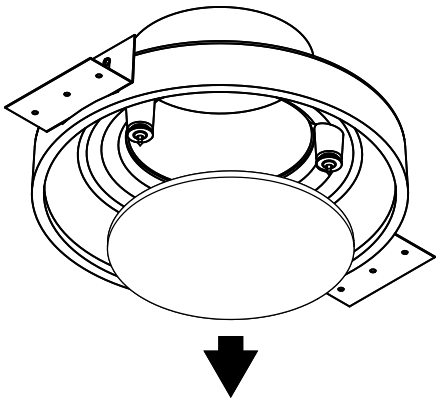

MOUNTING

1

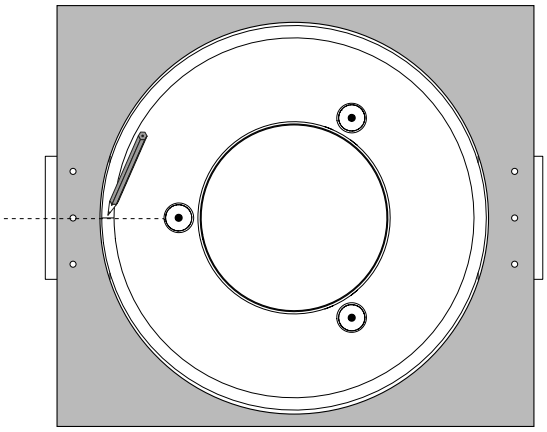

For comfortable mounting, locate the mounting template on the internal packing attachment.
Align the template with the diffuser and make a mark coaxial to the hole in the middle.

2

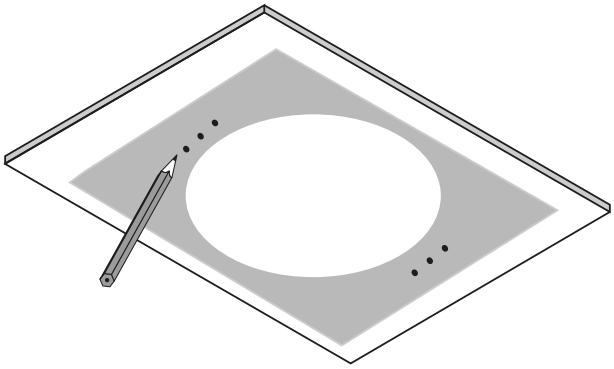

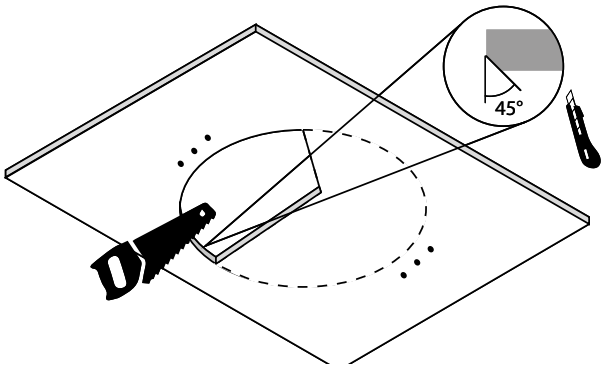

Align the template with the ceiling and mark up the places to install the diffuser and make holes for mounting.
Make a hole in the drywall. Remove the chamfer at a 45° angle up to 1/3 drywall thickness.

3

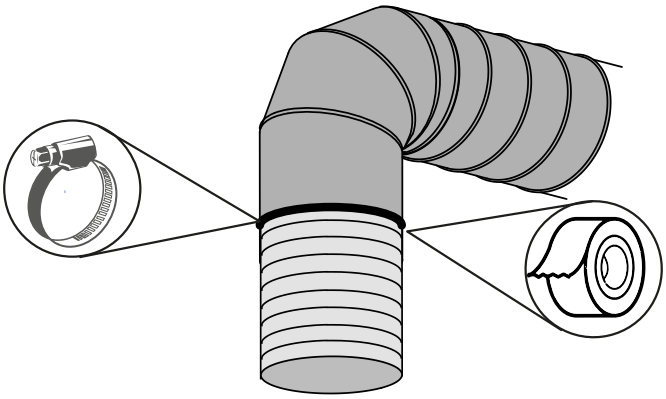

Connect the flexible air duct to rigid air duct.Fix the connection with the worm drive clampor duct tape.

4

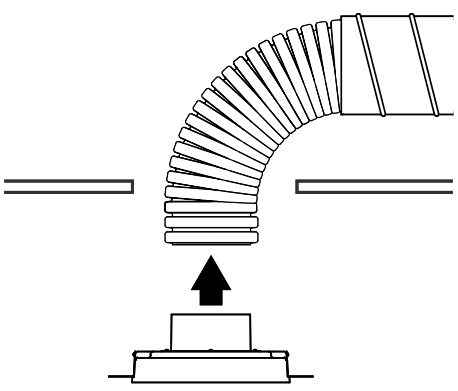

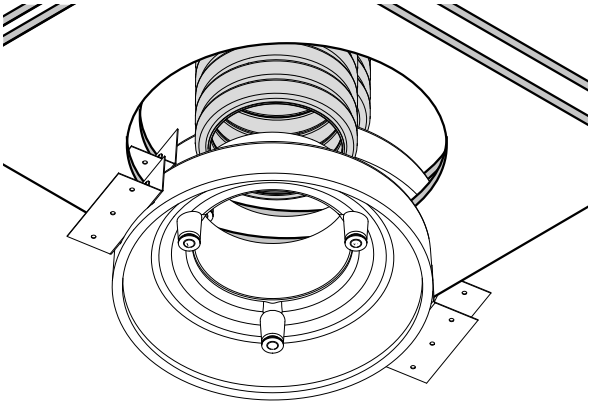

Install the air duct onto the diffuser's flange.

5

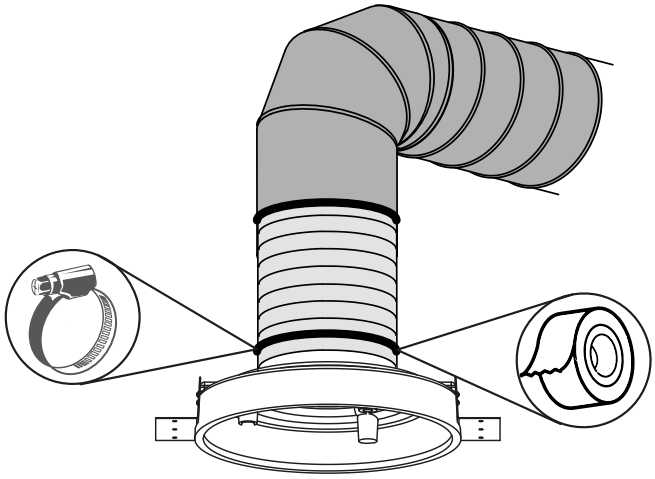

Secure the connection with the worm drive clamp or duct tape.

6

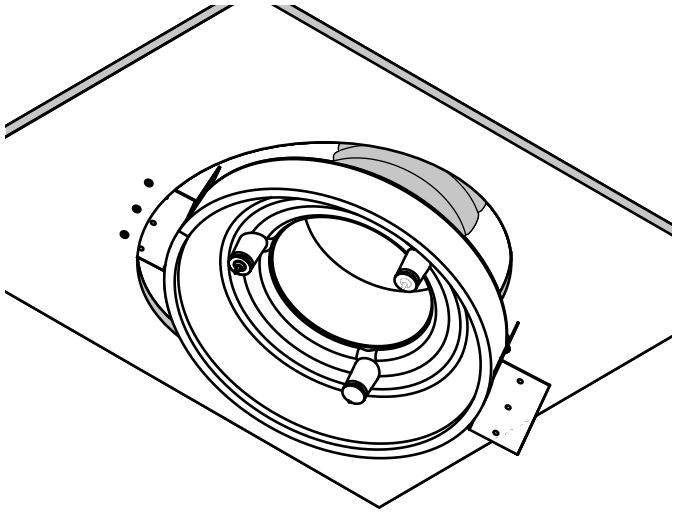

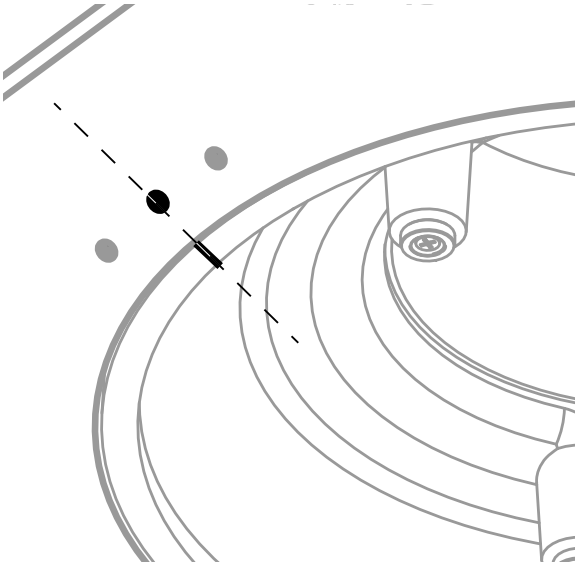

Install the diffuser into the hole in the ceiling. The mounting brackets must be supported with the back side of the drywall. Align the mark on the diffuser with the center of the hole in the middle.

7

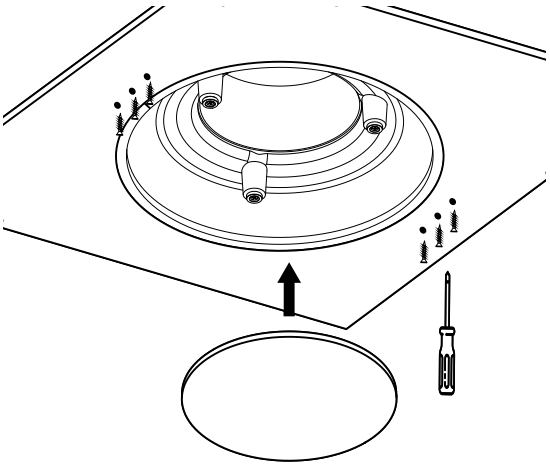

Secure the diffuser with screws. Install the front panel fixed with magnet holders.

DECORATION WORKS

ATTENTION! When marking up holes and decorating, it is recommended to use the technology, instruments and materials approved by the drywall manufacturer or local standard of the country where the drywall is being mounted.

Example of performing decoration works (according to the Knauf technology)

1

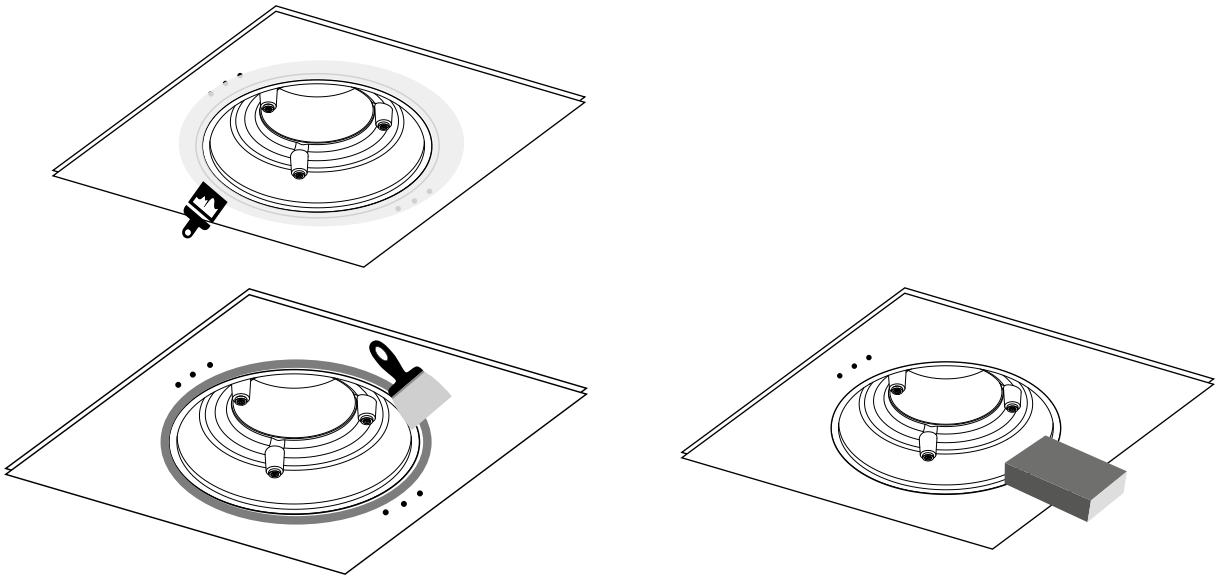

Dust the surfaces and slits. Apply the primer ("Knauf Tiefengrund" or similar).
When dry, putty (use "Knauf Fugenfüller" or similar) the slit between the diffuser and drywall.
When the spackling paste is dry, grind on the surface.

2

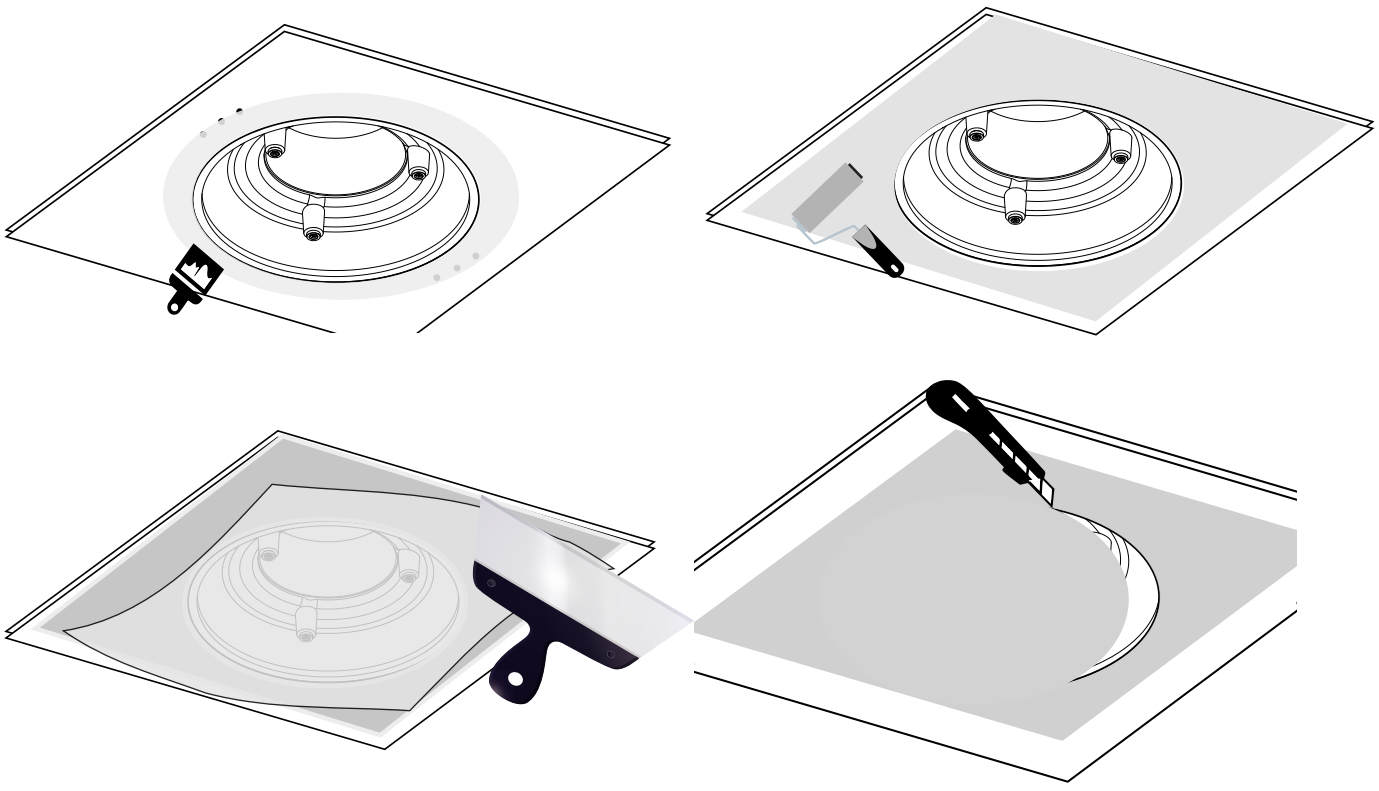

Apply primer («Knauf Tiefengrund» or equivalent).
After the primer has dried, apply putty (Knauf FugenFuller or equivalent) to the drywall.
Apply the fiberglass cloth and gently press it into the putty with a trowel. Apply a covering coat of putty on top of the fiberglass cloth.
After drying, trim the fiberglass cloth to the inner contour of the diffuser. Sand the surface.

3

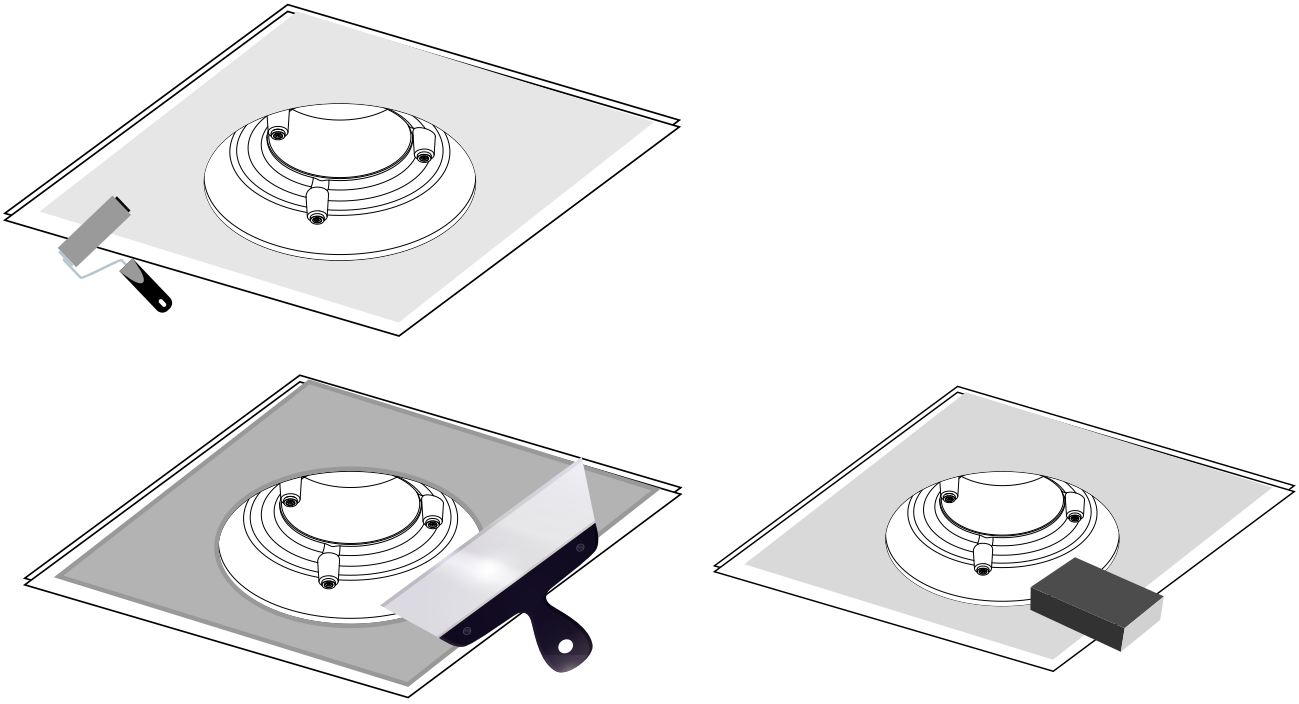

Apply the primer ("Knauf Tiefengrund" or similar).
When dry, putty ("Knauf HP Finish" or similar) and grind on the surface.

4

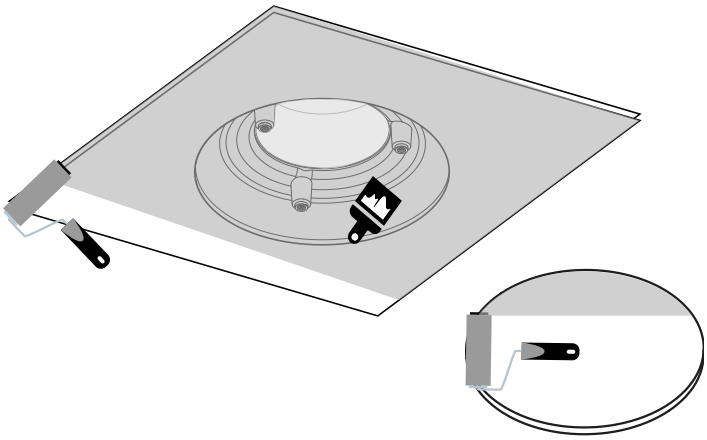

Apply the primer (the one recommended by the paint's manufacturer).
Paint the diffuser and the drywall.
For areas with high humidity, use primer, paint and putty for wet areas.

ADJUSTING AIR FLOW

Air flow is adjusted via the round throttle (not included in the delivery set and must be ordered separately).
To adjust, remove the inserts from the throttle as necessary and place it in the diffuser's spigot.

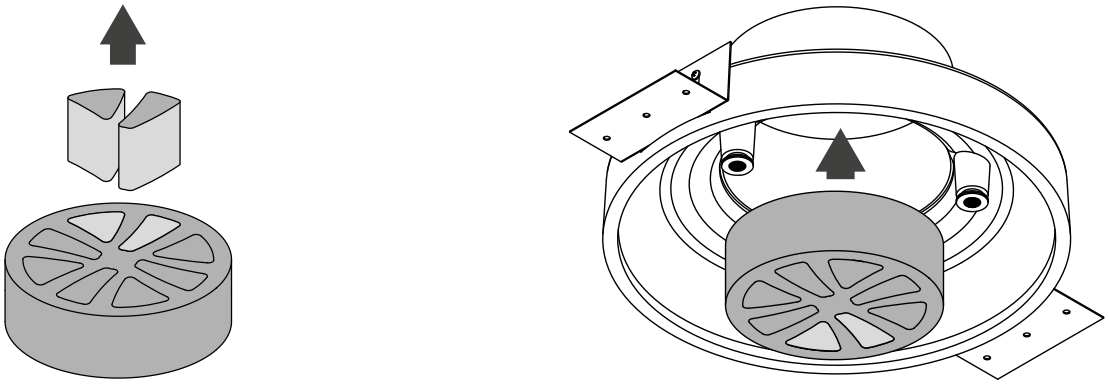

BLAUBERG

www.blaubergventilatoren.de
B277EN-02