BLAUBERG Ventilatoren

DPCH 125

DPCH 125



Flush-mounted diffuser



DPCH 125



FLUSH-MOUNTED DIFFUSER

Flush-mounted diffuser **DPCH** made of eco-friendly high-density foam is a perfect solution for rooms of different designs and purposes as it is almost unnoticeable on the ceiling, it has stylish appearance and can be painted to match the necessary color.

FEATURES

			
The magnetic decorative panel ensures easy and fast maintenance	**The diffuser is installed in suspended ceiling and easily connected to various air duct systems**	**Pressure loss is minimized due to the aerodynamic shape**	**Eight-segmented air flow regulator enables adjusting the necessary air flow (delivered separately)**

Design



Metal flange (MFC) with a rubber seal to be connected to air ducts or mounting elements

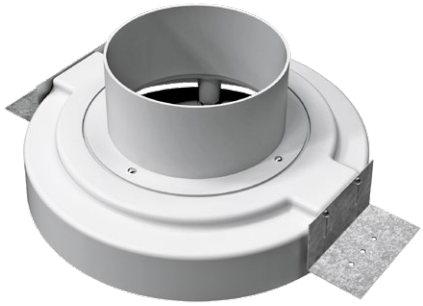

Plastic flange (by default) to be connected to rigid or flexible ducts

Dimensions [mm]

Model	Ø D	Ø D1	Ø D2	L	H	H1	B
DPCH 125	125	250	234	323	108	59	80
DPCH 125 MFC	124	250	234	323	99	50	80

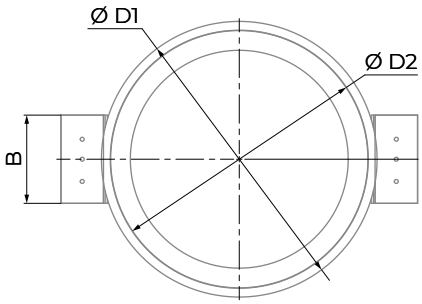

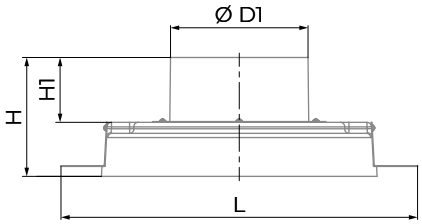

Aerodynamic data

DPCH 125 extract air

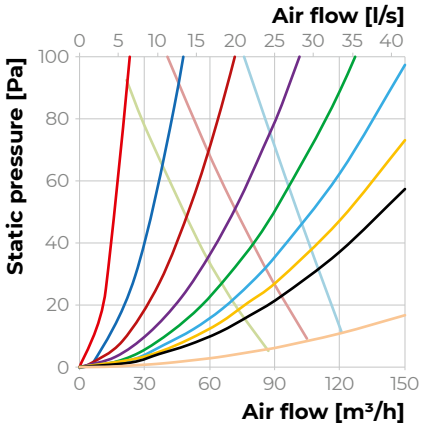

DPCH 125 supply air

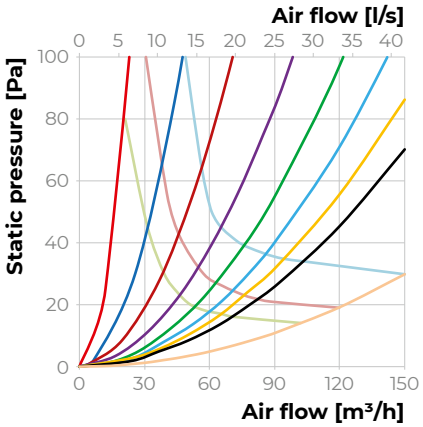

DPCH 125 supply air velocity

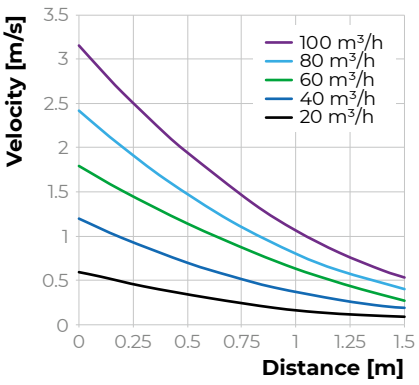

30 dB
25 dB
20 dB
Inserts removed – 1*
Inserts removed – 2*
Inserts removed – 3*
Inserts removed – 4*
Inserts removed – 5*
Inserts removed – 6*
Inserts removed – 7*
All inserts removed*
No air flow regulator

* The data is provided for the diffuser equipped with an R 125 F4 air flow regulator



blaubergventilatoren.net

Blauberg Ventilatoren GmbH
Stäblistraße 6
81477 Munich, Germany
HRB 203341
info@blaubergventilatoren.net

Technical changes reserved.
Illustrations and texts are non-binding.

12|2025